SENSORBILITY
Bringing sense to Lighting ...

Wiring up lights and a fan with a run-on timer from an Dimmer controller

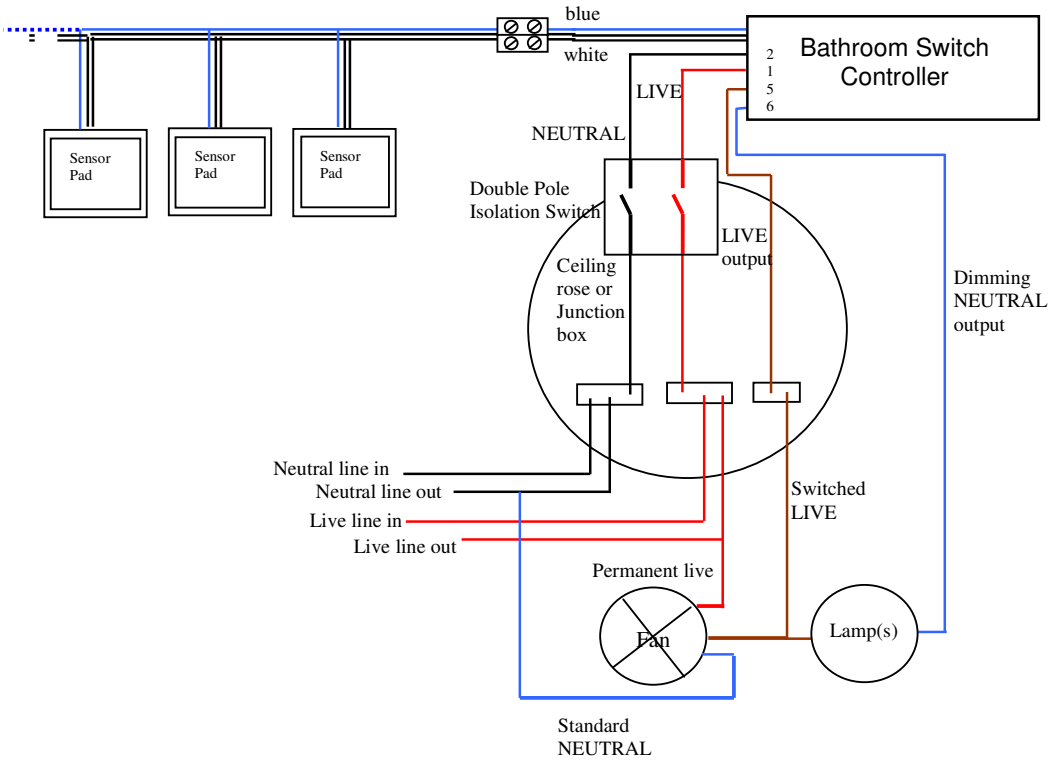

Sensorbility Ltd, West Prawle House, East Portlemouth, Salcombe. TQ8 8PW
Tel:- 01548 511498 ~ www.sensor.co.uk ~ Fax:- 01548 511393 ~ lights@sensor.co.uk