PIPES QUICKLY VIRIFY: Milano and Torino

Flue line lenght allowed for power flued gas fires.

SINGLE pipes Ø54, Ø80 and coax Ø80/125mm

NOTE: THE NUMBER OF ELBOWS MEANS THE TOTAL NUMBER OF ELBOWS USED.
NOTE: FOR LINEAR LENGTH IS DEFINED AS THE SUM OF ALL THE STRAIGHT HORIZONTAL AND VERTICAL.
***NOTE FOR COAX PIPES: MAX LINEAR LENGTH ALLOWED IS 20 METERS.**
NOTE FOR PIPES Ø54: THE ONLY MOD. MILANO130, TABULAR VALUES SHOULD BE HALVED FOR PROPER OPERATION.
NOTE FOR PIPES Ø80: THE VALUES IN THE TABLE CAN BE USED FOR ALL MODELS.
NOTE: FOR CERTAIN TYPES OF INSTALLATION OR LENGTHS GREATER THAN THE VALUES LISTED ABOVE, CONTACT A TECHNICIAN IN ITALKERO.

TYPES ALLOWED

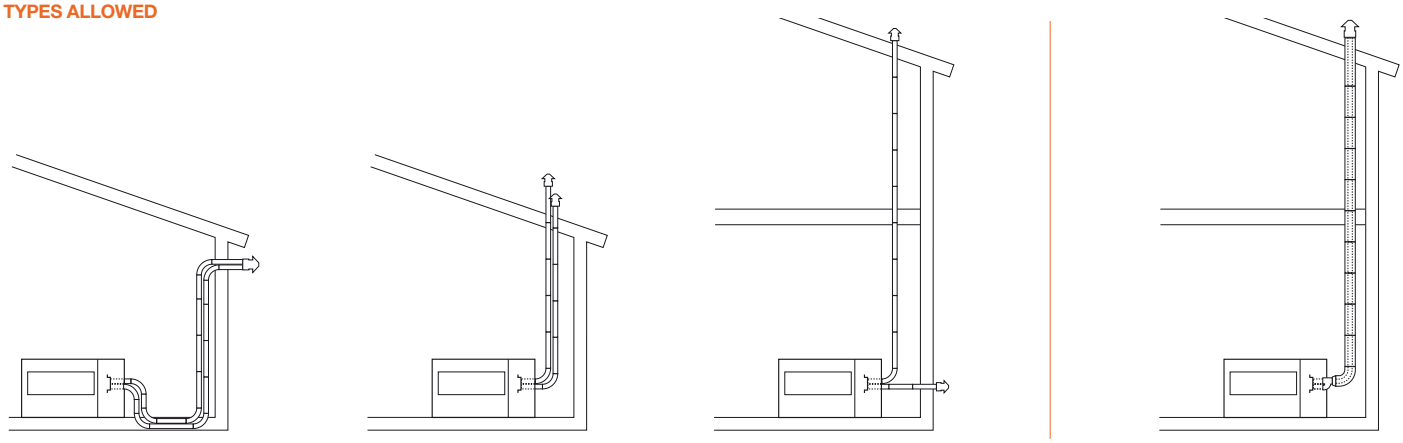

NOTE: BEFORE PROCEEDING WITH THE INSTALLATION, WE ADVISE INSPECTION BY QUALIFIED PERSONNEL. POSITIONING OF THE EXHAUST PIPES AND EQUIPPED FOR POWER FLUE ARE REGULATED BY THE UNI 7129. ALL THE PRODUCTS ARE CERTIFIED "THERE" AND ENDORSED AT THE EUROPEAN LEVEL.