mayr®

your reliable partner

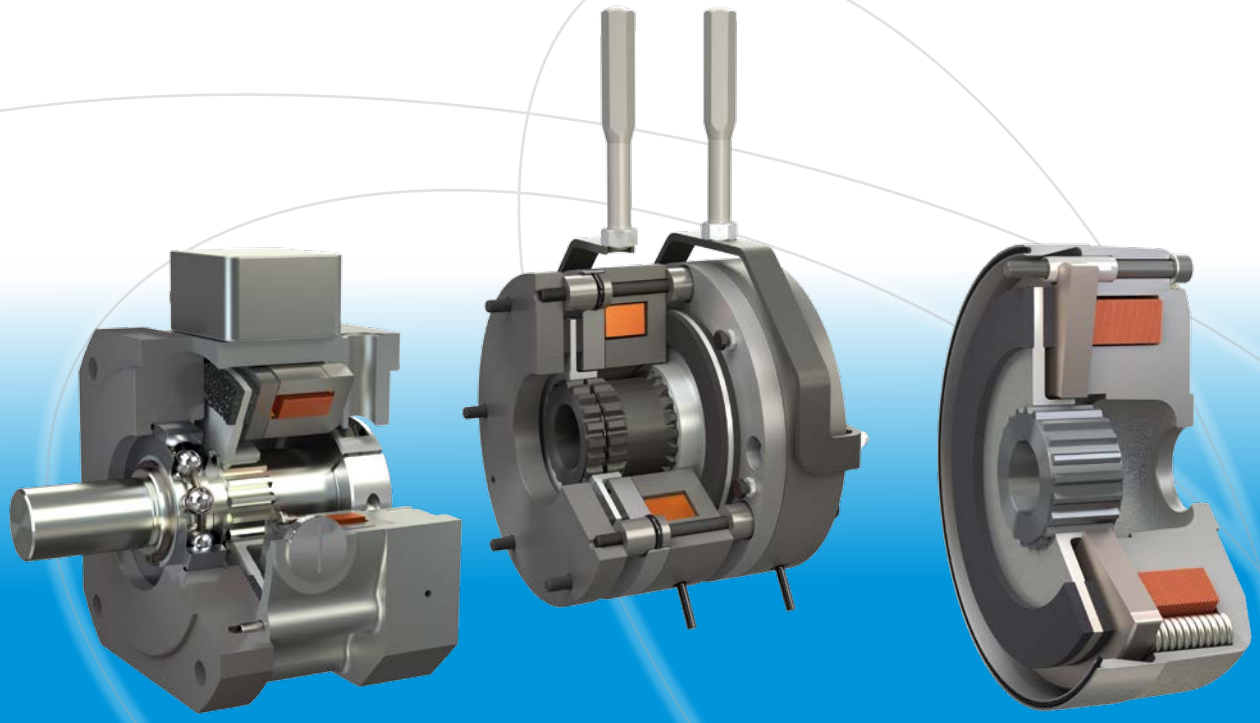

Safety brakes

IMG.803.V13.EN

www.mayr®.com

We safeguard the movements of this world

The Christian Mayr mill-construction business – founded in 1897.

Specialists for power transmission for more than a century

mayr® power transmission is one of the most traditional and yet most innovative German companies in the field of power transmission. From modest beginnings in the year 1897, the family enterprise from the Allgäu region has developed into world market leader. Today, 550 employees work at the headquarters in Mauerstetten; more than 1000 employees work for the company worldwide.

Unsurpassed - our standard range

mayr® power transmission offers an extensive variety of torque limiters, safety brakes, backlash-free shaft misalignment compensation couplings and high-quality DC drives. Also when it comes to customer-specific requirements, the company possesses the expertise to develop customized and economical solutions. This is why numerous renowned machine manufacturers trust in holistic solutions by *mayr*® power transmission.

Available worldwide

With eight subsidiaries in Germany, sales offices in the USA, France, Great Britain, Italy, Singapore and Switzerland as well as 36 additional country representatives, *mayr*® is available in all important industrial areas, guaranteeing optimum customer service around the globe.

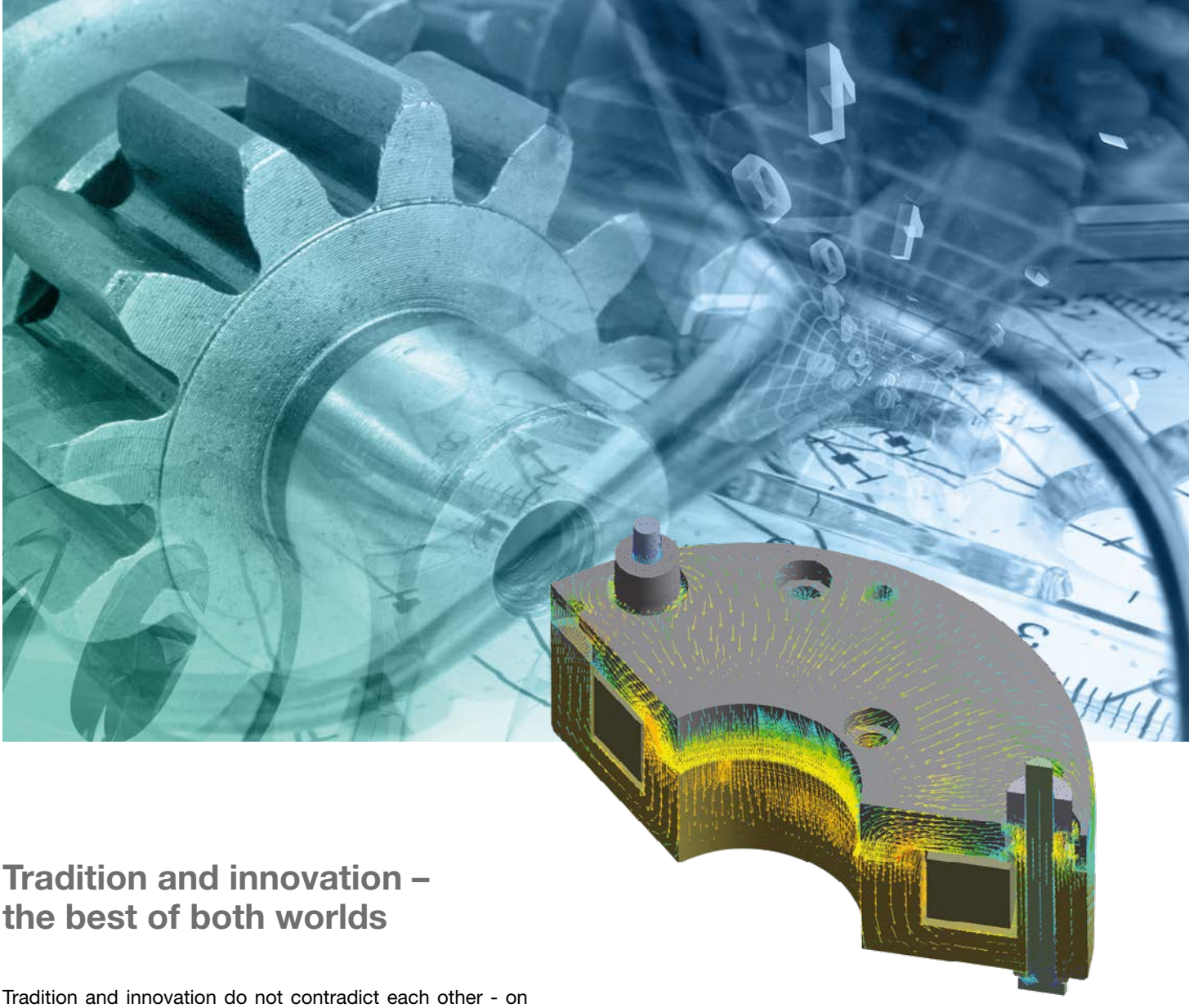

Tradition and innovation – the best of both worlds

Tradition and innovation do not contradict each other - on the contrary. They are the two supporting pillars which have guaranteed stability and reliability for generations. Long-term stability, independence as well as a good reputation and satisfied customers are important values for a family enterprise rich in tradition.

Therefore, we place emphasis on:

- Tested product quality,
- Optimum customer service,
- Comprehensive know-how,
- Global presence,
- Successful innovations and
- Effective cost management

Following our own objective of always offering our customers the technologically most advanced and economical solution, we have been able to gain the trust of many leading industrial companies from all branches and from all over the world as a reliable partner.

Place your trust in our know-how and our more than 50 years of experience in torque limiters, safety brakes and shaft couplings.

mayr®
your reliable partner

Tested quality and reliability

mayr® products are subject to meticulous quality inspections. These include quality assurance measures during the construction process as well as a comprehensive final inspection. Only the best, tested quality leaves our factory. All products are rigorously tested on calibrated test stands, and adjusted precisely to the requested values. An electronic database in which the measurement values are archived together with the associated serial numbers guarantees 100 % traceability. On request, we confirm the product characteristics with a test protocol.

The certification of our quality management according to DIN EN ISO 9001:2000 confirms the quality-consciousness of our colleagues at every level of the company.

Never compromise on safety

We make no compromises where safety is concerned. Only top products of a perfect quality guarantee that no people are injured or machines damaged in case of malfunctions, collisions and other hazardous situations. The safety of your employees and machines is our motivation to always provide the best and most reliable clutches, couplings or brakes.

mayr® power transmission holds numerous ground-breaking patents, and is the global market or technological leader for

- application-optimised **safety brakes,** for example for passenger elevators, stage technology and gravity loaded axes
- **torque limiters** to protect against expensive overload damage and production losses and
- backlash-free **servo couplings**.

Function

ROBA-stop® safety brakes are spring applied, electromagnetic safety brakes. These brakes ensure reliable and safe braking of machines and systems in any position in the event of a power switch-off, a power failure or an EMERGENCY STOP.

c UL us E189728

On request ROBA-stop® safety brakes can also be delivered with UL approval.

Overview

Construction Types we recommend

Suitable Types

Exemplary application areas	ROBA-stop®- positioning brake	ROBA-stop®-holding brake	ROBA-stop® - tacho brake	ROBA-stop® - peak load brake	ROBA-stop®-M-positioning brake	ROBA-stop®-M-holding brake	ROBA®-topstop®	ROBA®-alphastop®	ROBA®-servostop®	ROBA®-servostop® for robotic applications	ROBA®-pinionstop	ROBA®-linearstop	ROBA®-guidestop	ROBA-stop®-silenzio® dual circuit brake	ROBA-stop®-silenzio® single circuit brake	ROBA-stop®-silenzio® with double rotor	ROBA®-diskstop®	ROBA®-duplostop®	ROBA®-twinstop®	ROBA®-quatrostop	ROBA-stop®-S
Brake description page ...	6	6	6	6	7	7	8	9	10	11	12	13	14	15	15	15	16	17	18	19	20
General mechanical engineering	Construction Types we recommend	Construction Types we recommend	Construction Types we recommend	Construction Types we recommend	Construction Types we recommend	Construction Types we recommend	Construction Types we recommend	Construction Types we recommend			Construction Types we recommend	Construction Types we recommend	Construction Types we recommend	Suitable Types	Suitable Types	Construction Types we recommend	Suitable Types				Construction Types we recommend
Electromotors	Construction Types we recommend	Construction Types we recommend	Construction Types we recommend	Construction Types we recommend	Construction Types we recommend	Construction Types we recommend		Suitable Types		Construction Types we recommend				Suitable Types	Suitable Types						Construction Types we recommend
Servo drives						Suitable Types	Construction Types we recommend	Construction Types we recommend	Construction Types we recommend	Construction Types we recommend											
Crane construction				Construction Types we recommend																	Construction Types we recommend
Harbour/ship/seawater																					Construction Types we recommend
Elevator construction														Construction Types we recommend	Construction Types we recommend	Construction Types we recommend	Construction Types we recommend	Construction Types we recommend	Construction Types we recommend		
Escalators	Construction Types we recommend					Construction Types we recommend															
Stage construction												Suitable Types		Construction Types we recommend		Construction Types we recommend				Construction Types we recommend	
Hoists				Construction Types we recommend		Construction Types we recommend						Suitable Types	Construction Types we recommend	Suitable Types	Suitable Types	Suitable Types	Construction Types we recommend				Construction Types we recommend
Mobile devices with low voltage	Suitable Types	Suitable Types			Construction Types we recommend	Construction Types we recommend				Construction Types we recommend											
Medical technology		Construction Types we recommend				Construction Types we recommend		Construction Types we recommend		Construction Types we recommend					Suitable Types						
Robots/handling		Construction Types we recommend				Construction Types we recommend			Construction Types we recommend	Construction Types we recommend	Construction Types we recommend	Construction Types we recommend									
Gravity loaded axes						Construction Types we recommend	Construction Types we recommend	Construction Types we recommend			Construction Types we recommend	Construction Types we recommend	Construction Types we recommend			Suitable Types					
Linear motors												Construction Types we recommend	Construction Types we recommend								
Machine tools							Construction Types we recommend	Construction Types we recommend	Construction Types we recommend	Construction Types we recommend	Construction Types we recommend	Construction Types we recommend	Construction Types we recommend								

Special characteristics

Special characteristics	ROBA-stop®- positioning brake	ROBA-stop®-holding brake	ROBA-stop® - tacho brake	ROBA-stop® - peak load brake	ROBA-stop®-M-positioning brake	ROBA-stop®-M-holding brake	ROBA®-topstop®	ROBA®-alphastop®	ROBA®-servostop®	ROBA®-servostop® for robotic applications	ROBA®-pinionstop	ROBA®-linearstop	ROBA®-guidestop	ROBA-stop®-silenzio® dual circuit brake	ROBA-stop®-silenzio® single circuit brake	ROBA-stop®-silenzio® with double rotor	ROBA®-diskstop®	ROBA®-duplostop®	ROBA®-twinstop®	ROBA®-quatrostop	ROBA-stop®-S
CSA-certification	✓	✓	✓	✓	✓	✓	✓	✓	✓	✓	✓	✓	✓	✓	✓	✓	✓	✓	✓	✓	✓
ATEX design					✓	✓															
Sealed design	✓	✓			✓	✓					✓	✓									✓
Two independent brake circuits							✓						✓	✓			✓	✓	✓	✓	
Minimal noise														✓	✓	✓	✓	✓	✓	✓	
Brake description page ...	6	6	6	6	7	7	8	9	10	11	12	13	14	15	15	15	16	17	18	19	20

ROBA-stop®-Universal
The multifunctional all-round safety brake

Performance Characteristics

- **Sensitive braking torque adjustment**
- **Simple wear re-adjustment**
- **Designs as positioning brake, holding brake, tacho brake and peak load brake**
- **Enclosed construction**
- **Simple installation**
- **Class of insulation F**
- **Can be used for 100 % duty cycle**
- **Short switching times**

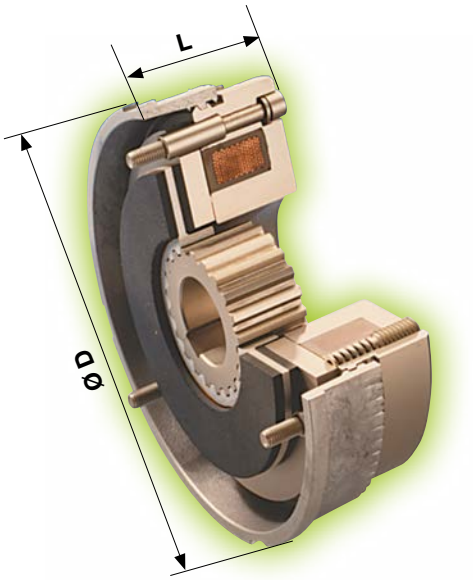

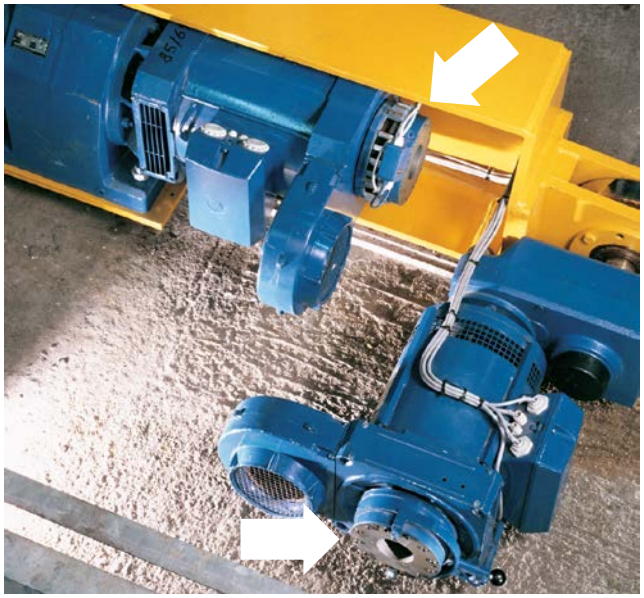

ROBA-stop® application in a high rack warehouse

Designs

- **ROBA-stop®-positioning brake**
  Brake as working brakes from movement and offer high positioning and repetitive accuracy.
- **ROBA-stop®-holding brake**
  Achieve very high braking torques and hold drives safely in position when they are not running.
- **ROBA-stop®- tacho brakes**
  Feature a centering recess and tapped holes on the back of the brake for mounting a tacho-generator.
- **ROBA-stop®-tacho peak load brakes**
  Allow a tacho-generator to be mounted and have a special armature disk for high friction work.
- **ROBA-stop®- peak load brakes**
  Have a special, extremely strong armature disk which allows high friction work.

Technical Data and Dimensions				Size									
				2	3	4	5	6	7	8	9	10	11
Braking torque [1]		M	[Nm]	1.1	3	6	12	26	50	100	200	400	800
	Holding brake	M	[Nm]	–	5	10	22	48	90	180	360	620	1250
Shaft Ø			[mm]	6 – 11	8 – 12	10 – 15	10 – 20	15 – 25	20 – 32	25 – 45	25 – 50	25 – 60	30 – 80
	Holding brake		[mm]	–	8 – 12	10 – 15	10 – 20	15 – 25	20 – 32	25 – 45	30 – 50	30 – 60	30 – 80
Brake	Outer Ø	D	[mm]	59	79	98	114	142	165	199	220	275	360
	Length	L	[mm]	28	30.2	32.2	39.3	43.2	58.2	66.7	74.3	96.3	116.3
	Length peak load brake	L	[mm]	–	–	–	–	–	68.2	77.7	87.3	116.3	138.3

1) Tolerance +40 % / -20 %

For detailed technical data and dimensions, please see catalogue: ROBA-stop® K.800.V_ _._ _

ROBA-stop®-M
The robust, cost-effective motor brake

Performance Characteristics

- **Maintenance-free (no re-adjustment)**
- **Simple installation**
- **Completely enclosed brake housing acc. Protection IP54 or IP65**
- **Class of insulation F**
- **Can be used for 100 % duty cycle**
- **Short switching times**

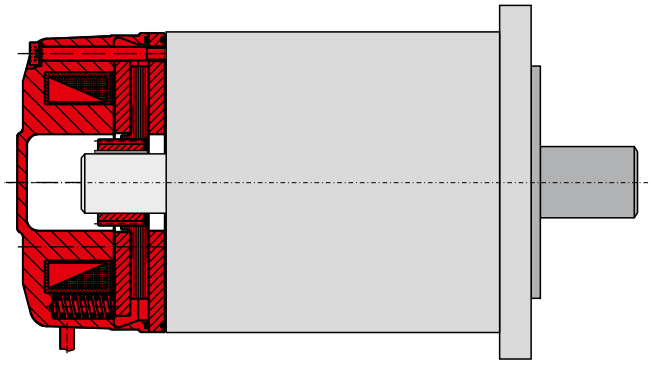

ROBA-stop®-M safety brake on the B-bearing side of an electromotor. The design with flange plate is used if there is no suitable counterfriction surface for the brake linings available motor-side.

Designs

- **ROBA-stop®-standard brake**
  As a working brake it brakes from movement, and positions at the required point.
- **ROBA-stop®-M holding brake**
  Holds drives safely in position when they are not running and brakes from movement on EMERGENCY STOP.

Technical Data and Dimensions				Size										
				2	4	8	16	32	60	100	150	250	500	1000
Braking torque	Standard brake 1)	M	[Nm]	2	4	8	16	32	60	100	150	250	500	1000
	Holding brake 2)	M	[Nm]	4	8	16	32	64	100	180	250	450	800	1600
Shaft Ø	Standard brake		[mm]	8 – 15	10 – 15	11 – 20	14 – 25	19 – 30	22 – 35	24 – 45	30 – 50	40 – 60	50 – 80	75 – 90
	Holding brake		[mm]	8 – 15	10 – 15	11 – 20	14 – 25	19 – 30	22 – 35	24 – 45	30 – 50	40 – 55	50 – 75	75 – 90
Brake	Outer Ø	D	[mm]	76	87	103	128	148	168	200	221	258	310	382
	Length	L	[mm]	39	41.5	45.2	55.7	61.7	72.5	84	97	116	114	135

1) Tolerance +30 % / -10 %
2) Tolerance +40 % / -20 %

For detailed technical data and dimensions, please see catalogue: ROBA-stop®-M K.891.V_ _._ _

ROBA®-topstop®
Modular safety brake system for a servomotor attachment on the A-bearing side

Performance Characteristics

- **The axis is held safely in any position, even with a dismantled servomotor, e.g. during machine maintenance**
- **Optimum braking system for vertical axes and when handling large weights**
- **Long lifetime even after frequent EMERGENCY STOP brakings**
- **Indication of the operating condition (opened/ closed) via an integrated condition monitoring**
- **Short, compact design**
- **Low rotatory moments of inertia**
- **Low self-induced heat production even at 100 % duty cycle**
- **Design with Protection IP65 available**

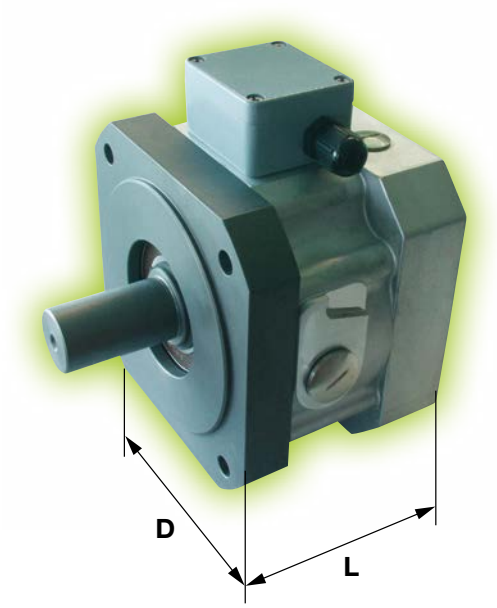

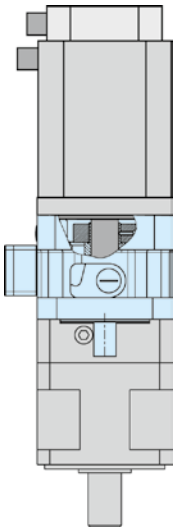

ROBA®-topstop® with output shaft for direct mounting onto a gearbox with a hollow shaft.

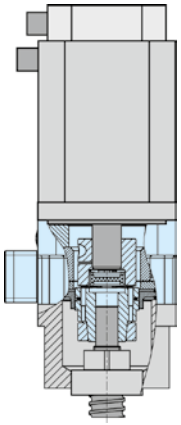

Brake system with integrated, plug-in shaft coupling. Separate coupling and coupling housing are no longer necessary. Very short design.

Designs

- ❑ Single circuit brake with a bearing-supported output shaft: i.e. suitable for toothed belt drives
- ❑ Single circuit brake with an integrated plug-in shaft coupling
- ❑ Single circuit brake with a shaft coupling and an installed EAS®-smartic® safety clutch
- ❑ Redundant dual circuit brake system with a bearing-supported output shaft
- ❑ Basic brake module for special brake configurations

Due to their adaptable flange dimensions, ROBA®-topstop® safety brakes can easily be integrated into pre-existing constructions between the servomotor and the counterflange. If necessary, the design can be easily adapted to any installation situation by changing the standard flanges. Seven standard sizes for braking torques of 6 to 400 Nm are available for delivery at short notice.

Technical Data and Dimensions				Size						
				100	120	150	175	200	230	260
Braking torque [1]	Single circuit brake	M	[Nm]	6	12	45	70	100	150	200
	Single circuit brake (with overexcitation)	M	[Nm]	12	30	90	120	160	300	400
Single circuit brake	4-cornered flange	D	[mm]	100	126	155	176	194	235	264
	Length	L	[mm]	80	104	119	138.5	138.5	185	185

1) Tolerance +40 % / -20 %

For detailed technical data and dimensions, please see catalogue: ROBA®-topstop® K.899.V_ _._ _

ROBA®-topstop®
Brake module with plug-in shaft coupling

These brake modules were conceived for special customer-specific applications. Depending on the respective mounting situation, these brake can be mounted directly onto a pre-installed friction flange, or they can be delivered with a mounting flange which has been specially adapted for the particular application.
The brake module can be equipped with the standard clamping hub shaft and ROBA®-ES shaft couplings or with special coupling constructions which can be optimally adapted for individual mounting conditions.

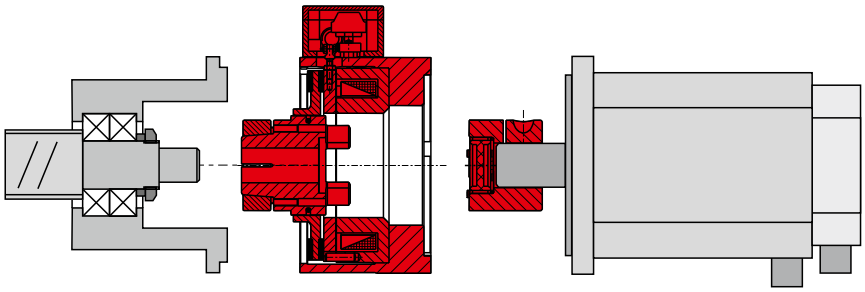

ROBA®-alphastop®
Safety brake for A-bearing-side attachment onto Fanuc motors

Performance Characteristics

- **Complete unit with backlash-free shaft coupling**
- **Easy installation between servomotor and mounting flange**
- **Completely enclosed brake housing**
- **Design with output shaft for direct mounting onto hollow shaft gearboxes**
- **Can be used for 100 % duty cycle**

The ROBA®-alphastop® is a safety brake, installed between the servomotor and a bell housing. The brake toothed hub is combined with the smartflex® backlash-free steel bellows coupling. Frictionally-locking clamping rings ensure backlash-free torque transmission between the motor and the ball screw spindle.
The ROBA®-alphastop® is designed with an output shaft for direct mounting onto a gearbox with a hollow shaft, meaning that the shaft coupling is unnecessary.

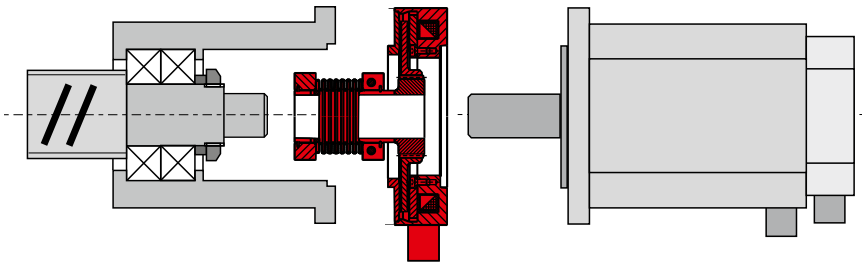

For detailed technical data and dimensions, please see brochure: **ROBA®-alphastop® P.897.V_ _._ _**

ROBA®-servostop®
The perfect safety brake for servo motors

Performance Characteristics

- **Can be used up to 120 °C**
- **High permitted friction work**
- **High performance density**
- **Low mass moment of inertia**
- **Axial positioning to shaft not required**
- **Reliable due to fail-safe principle**
- **High operational safety**
- **Simple and robust design**
- **Simple installation**

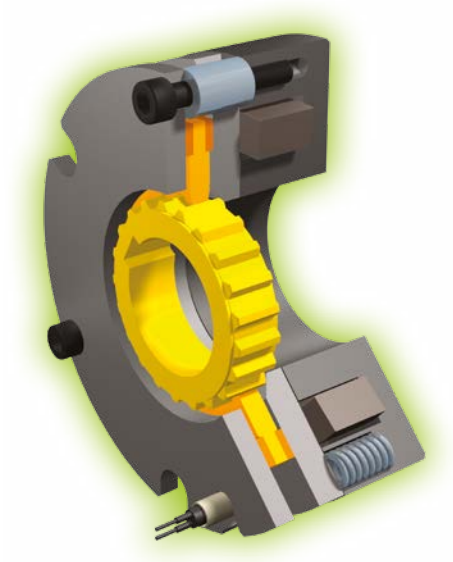

Installation Example

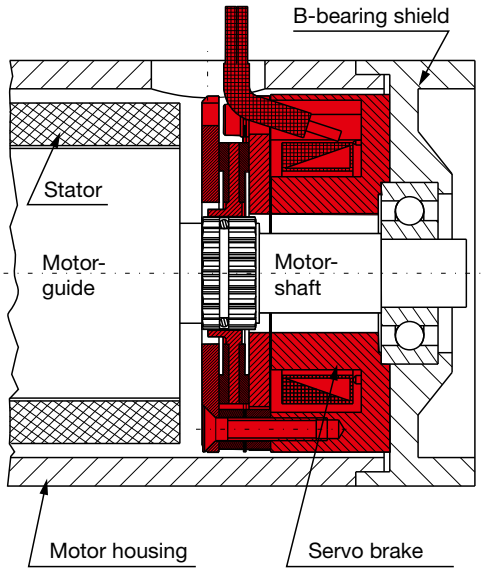

ROBA®-servostop® in the B-bearing shield of a motor:
Due to their special construction, temperature-induced expansion and bearing backlash have no negative influence on the brake function and reliability.

Optimally tailored to your servomotors

We will design a perfectly adapted and aligned solution suitable for your servomotors.
Just contact us!

The table below contains only the most important data and dimensions of the basic sizes.

Technical Data, Dimensions			Size					
			60	80	100	120	140	160
Minimum holding torque at an ambient temperature of 120 °C	T_N	[Nm]	3.25	7	16	32	60	100
Outer Ø	D	[mm]	62	80	102	124	147	166
Length	L	[mm]	30	36	45	45.6	54.6	60.6

For detailed technical data and dimensions, please see brochure: ROBA®-servostop® P.898000.V_ _._ _

ROBA®-servostop® for robotic applications
Robust lightweight brakes for demanding ambient conditions

Performance Characteristics

- **Extremely thin and lightweight construction shape**
- **High performance density in spite of low energy intake**
- **Adapted geometry for very different installation situations**
- **Extremely short switching times**
- **Can be used up to 120 °C**
- **Ready for installation**
- **Inspected unit**
- **Can be produced with a large inner diameter, for example for use in hollow shaft motors**

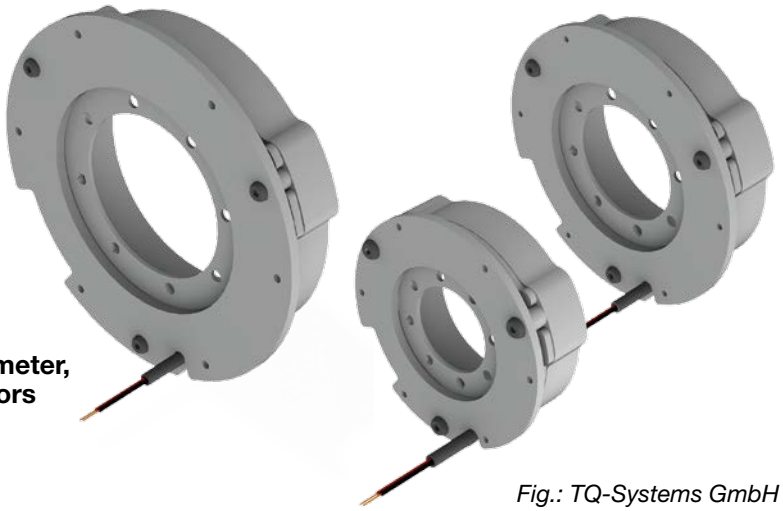

Fig.: TQ-Systems GmbH

The ROBA®-servostop® safety brakes are tailored to robotic requirements with their extremely thin construction shape and low weight, and can therefore easily cope in demanding ambient conditions. They guarantee reliable, constant holding torques over the entire service lifetime, have a high performance density and are wear-resistant.

ROBA®-servostop® safety brakes in the compact RoboDrive hollow shaft motors of the RD construction series. *Fig: TQ-Systems GmbH*

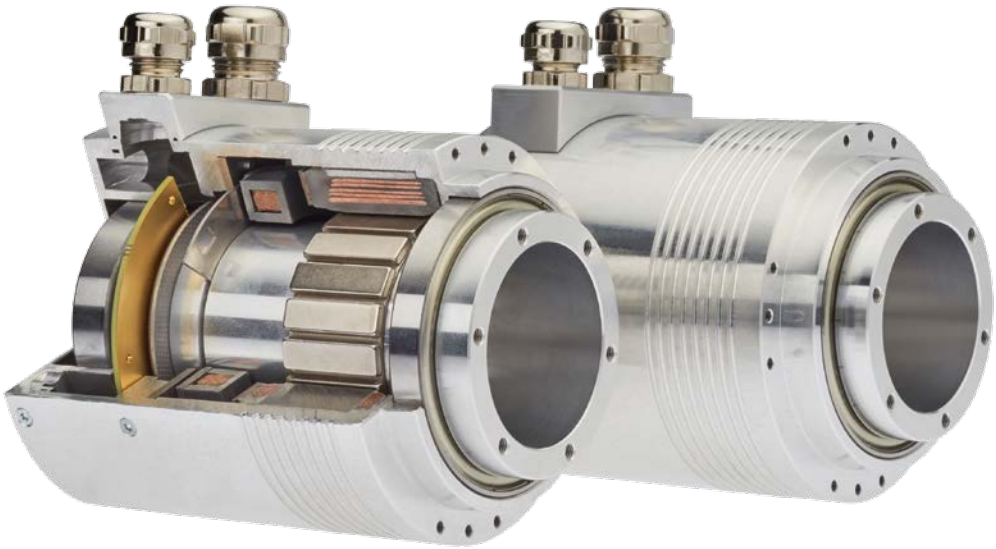

ROBA®-pinionstop
The safe rack and pinion brake

Performance Characteristics

- **Safe holding of the axis via ready-to-install brake module with pinion shaft**
- **Independent, electromagnetically releasing spring applied brake system**
- **Integrated release monitoring**
- **Sealed brake housing**
- **Individual dimensioning and design possibilities of the brake configuration**
- **Simple installation**
- **Easy implementation of a redundant brake system (according to category 3) by mounting a second ROBA®-pinionstop brake or by using an additional brake on the servomotor.**

The ROBA®-pinionstop as an independent brake system engages directly and in any position onto the toothed rack and is closed in a de-energised condition. This safety brake is therefore able to offer high safety on power failure and EMERGENCY STOP as well as during installation and maintenance work.

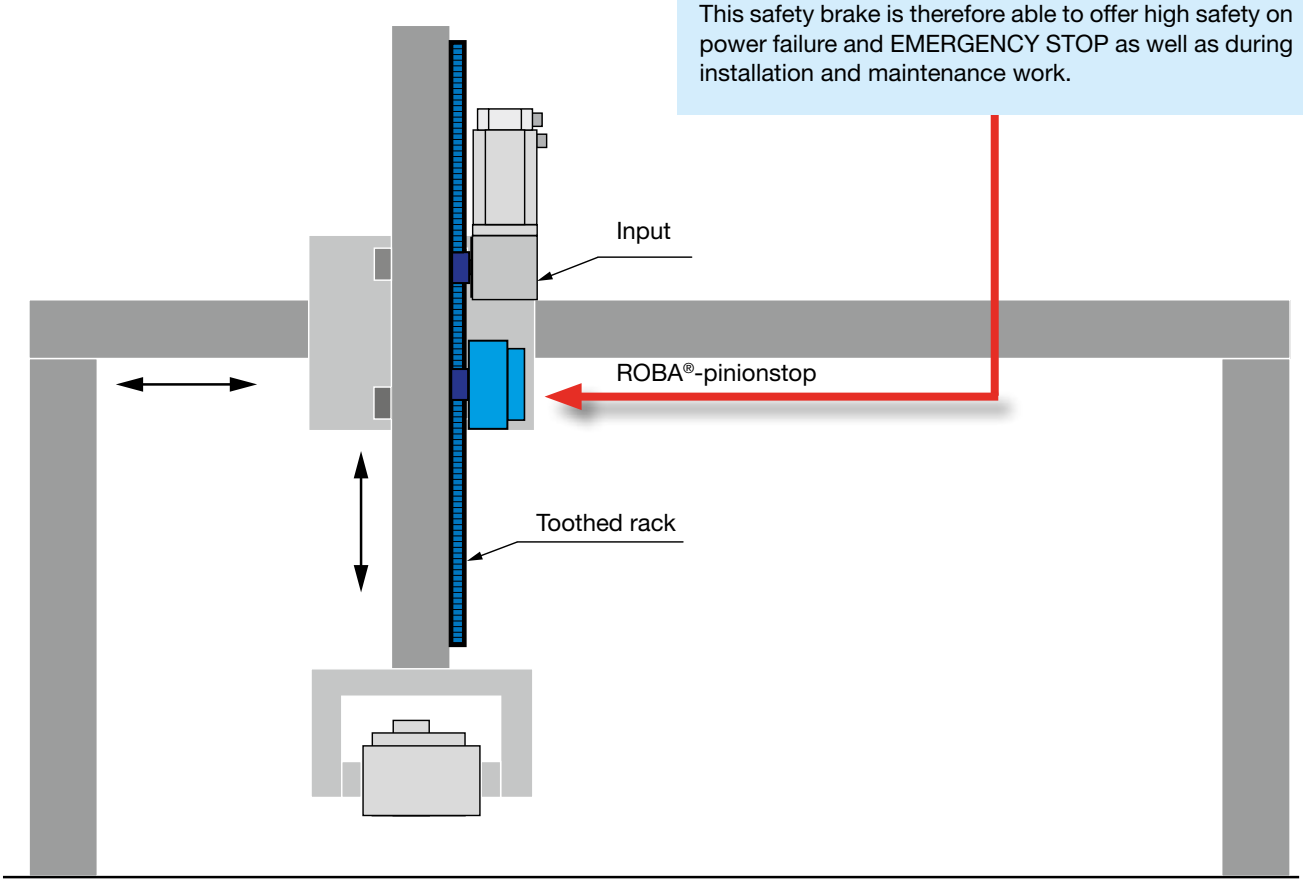

For detailed technical data and dimensions, please contact the manufacturers.

ROBA®-linearstop
The hydraulic, pneumatic and electromagnetic brake system for linear axes

Performance Characteristics

- **Backlash-free force transmission having an effect on both sides**
- **Safety brake system according to the fail-safe principle**
- **No self-reinforcement during clamping**
- **Clearing the clamping device is not necessary**
- **Maximum performance density**
- **Suitable for EMERGENCY STOP braking actions**
- **Minimum reaction times**
- **Integrated switching condition monitoring possible**
- **Long service lifetime**
- **Can easily be integrated into existing constructions**
- **TÜV (German Technical Inspectorate) -tested acc. Trade Association inspection policies** (not valid for Type 382)

Additionally on pneumatic design Type 381.1_ _.0

- **Reliable dynamic braking**

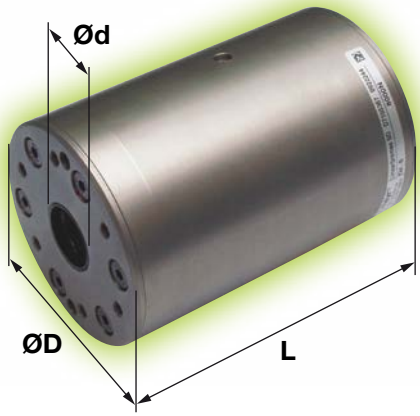

As a new brake system, the ROBA®-linearstop offers unique possibilities for increasing the safety of machinery. As a compact brake unit it can be integrated into already existing machinery and system constructions easily, quickly and without extensive adjustment work. By mounting a second ROBA®-linearstop brake or by using an additional brake on the servomotor, a redundant brake system can be implemented easily.

The unit having a direct effect on the rod brakes independently from the drive system.

In linear motor axes, the ROBA®-linearstop prevents e.g. not only unpermitted height loss of the vertical carriage due to power failure or other malfunctions, but is also capable of braking dynamic movements safety in EMERGENCY STOP situations.

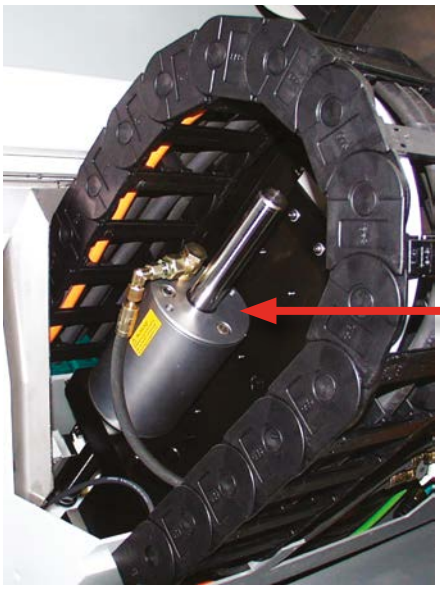

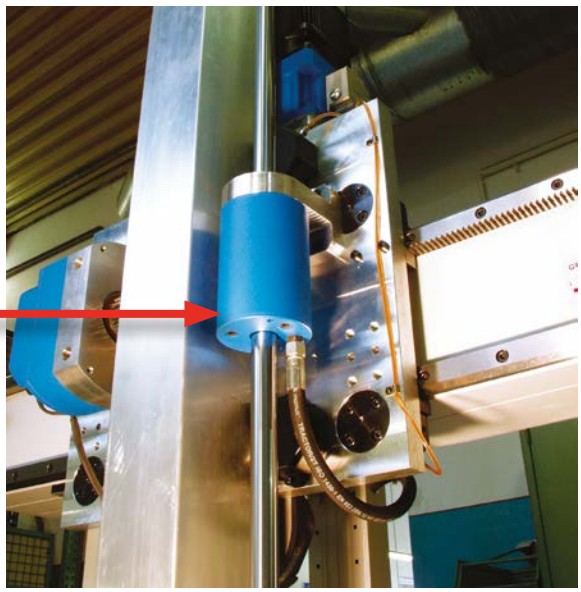

Technical Data, Dimensions			Size													
			Pneumatic brake system						Hydraulic brake system				Electromagnetic brake system			
			20	30	40	60	70	80	10	20	30	40	20	40	60	80
Nominal holding force	F_N	[kN]	0.45 – 1.2	0.8 – 2.2	1.5 – 4.4	4.6 – 13.8	7.5 – 22.5	12.5 – 40	4 – 10	8 – 20	20 – 35	35 – 50	0.18 – 0.55	0.6 – 2.1	1.8 – 6.5	4.5 – 17
Outer Ø	D	[mm]	46	56	70	110	140	178	91	112	140	170	50	75	110	160
Brake rod Ø	d	[mm]	16	20	20	25	32	40	30	30	40	50	10	12	20	25
Max. length	L	[mm]	147.9	152.9	157.9	184.5	213	246.6	131	163	172	189	169	189	224	270

For detailed technical data and dimensions, please see catalogue: ROBA®-linearstop K.381.V_ _._ _

ROBA®-guidestop
Safety brake and backlash-free clamping unit for profiled rail guides

Performance Characteristics

- **Maximum safety thanks to direct, backlash-free and rigid clamping**
- **Maximum safety thanks to extremely high holding forces and fail-safe principle**
- **Powerpack with two braking circuits for double the holding force or redundant design**
- **Cost-efficient solution for limited installation space**
- **High degree of rigidity up to the full nominal force**
- **Extremely high holding forces**
- **Designed for standard linear guides**

The backlash-free and rigid clamping

- Reinforces the NC axis
- Is gentle on the ball screw spindle
- Improves process accuracy
- Increases the machining performance

Design

Integrated into a carriage, the ROBA®-guidestop works with two brake circuits independent of each other, and as a result can be used as a redundant dual circuit brake.

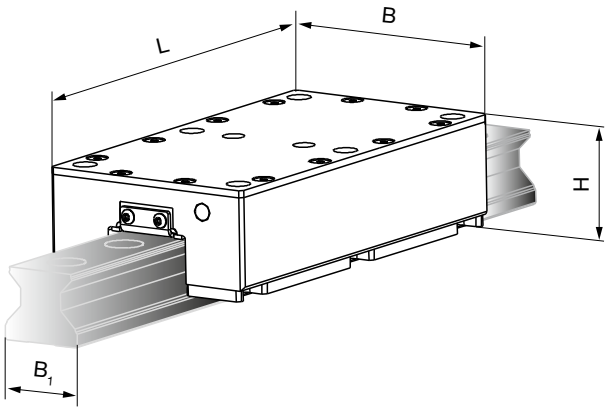

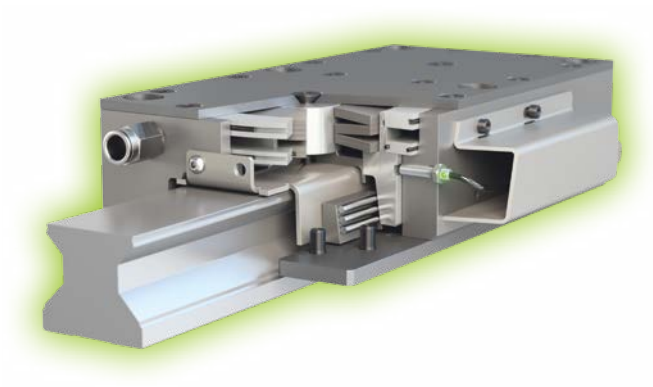

Function

The spring-loaded, enclosed ROBA®-guidestop, which can be opened hydraulically or pneumatically, clamps a profiled rail steplessly and backlash-free.
Due to the spring-loaded system, the fail-safe principle can be guaranteed, the ROBA®-guidestop works as a safety brake.

ROBA®-guidestop clamps with extremely high rigidity directly onto the linear guide.

The direct clamping on the linear guide provides decisive advantages, above all on gravity loaded axes, when the risk of injuries to people is to be minimised.

ROBA®-guidestop takes on the load when the vertical axis is stationary, for example during machining. In this phase, the drive motor can be switched off and removed from the control. Switching off the motor eliminates the regulating movements and thus is gentle on the ball screw spindle.

The additional reinforcement of the NC axis increases process accuracy, increases the machining performance and can, for example during heavy machining, bring other technological advantages. The machining process is lower in vibrations and thus improves the surface quality.

Technical Data, Dimensions Standard				Size							
				Pneumatic brake system				Hydraulic brake system			
				25	35	45	55	35	45	55	65
Nominal holding force		F_N	[kN]	1.4 – 2.2	2.8 – 4.4	4.0 – 6.0	6.0 – 9.0	10	15	20	34
Brake	**Length**	D	[mm]	145	192	225	270	192	225	270	325
	Height	d	[mm]	40.2	50.7	59	72.6	50.7	59	72.6	85.7
	Width	L	[mm]	70	100	120	140	100	120	140	170
Rail	**Width**	B_1	[mm]	23	34	45	53	34	45	55	65

For detailed technical data and dimensions, please see brochure: ROBA®-guidestop P.380000.V_ _._ _

ROBA-stop®-silenzio®
The quietest safety brake for elevator and stage drives

Performance Characteristics

- **Noise level of the basic version under 60 dB(A) even after several million switchings**
- **Dual circuit brake as redundant brake system according to BGV C 1 and EN 81**
- **Very short construction length**
- **Simplest possible installation**
- **No air gap adjustment necessary**
- **Microswitch or proximity switch can be mounted for release monitoring**
- **Brakes can be individually switched and inspected**
- **Type examination tested**

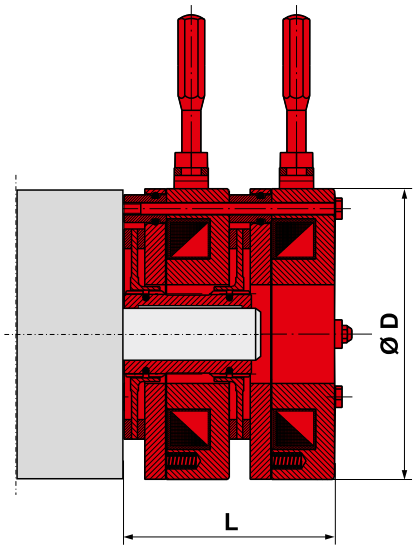

❑ **Dual circuit brake**
Redundant brake system with two brake bodies working independently of each other

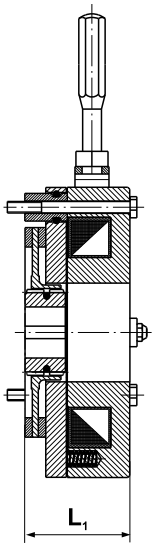

❑ **Single circuit brake**
Compact brake with an extremely short construction length

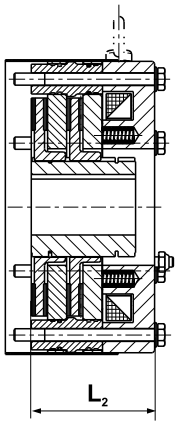

❑ **Double rotor design**
Single circuit brake with two rotors (4 friction surfaces) with doubled braking torque

Technical Data and Dimensions				Size											
				4	8	16	32	64	100	200	300	500	800	1300	1800
Max. braking torque 1)	Dual circuit brake	M	[Nm]	2 x 5	2 x 10	2 x 19	2 x 40	2 x 77	2 x 120	2 x 240	2 x 360	2 x 600	2 x 1000	2 x 1560	2 x 2150
	Single circuit brake	M	[Nm]	5	10	19	40	77	120	240	360	600	1000	1560	2150
	Double rotor design	M	[Nm]	–	–	–	–	–	–	–	720	1200	2000	3120	4300
Shaft Ø	min - max		[mm]	8 – 15	9 – 20	14 – 24	18 – 30	18 – 35	18 – 46	23 – 50	24 – 60	40 – 70	45 – 75	56 – 90	66 – 105
Outer Ø		D	[mm]	88	108	130	153	168	195	223	261	285	329	370	415
Length	Dual circuit brake	L	[mm]	87	91	99	109	127	134	152	159	172	189	199	205
	Single circuit brake	L_1	[mm]	43.5	45.5	49	54.5	63.5	67	76	79.5	86	94.5	99.5	102.5
	Double rotor design	L_2	[mm]	–	–	–	–	–	–	–	109.4	120.6	133.7	143.7	148.7

1) Tolerance +60 %

For detailed technical data and dimensions, please see catalogue: ROBA-stop®-silenzio K.896.V_ _-_ _

ROBA®-diskstop®
The electromagnetic safety brake system for brake disks

Performance Characteristics

- **Operation without rubbing noise due to unique patented alignment mechanism**
- **Attractive solution for large braking torques**
- **Minimum-noise operation**
- **Redundancy according to EN 81 when assembling two brakes**
- **Brakes can be individually switched and inspected**
- **Type examination tested**
- **High performance density**

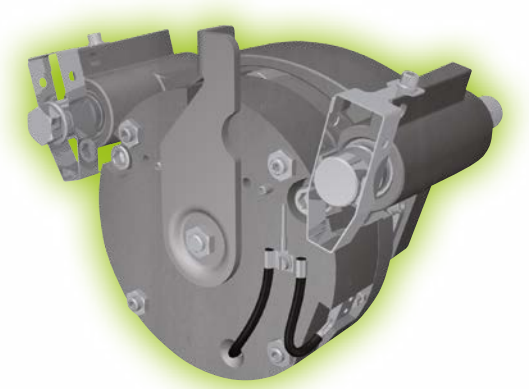

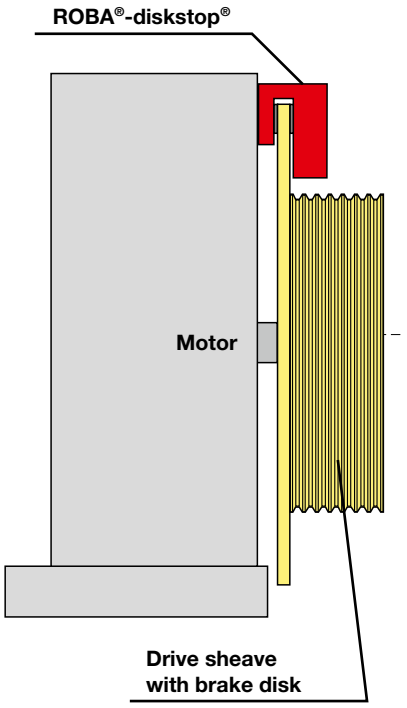

Sizes 6 – 8

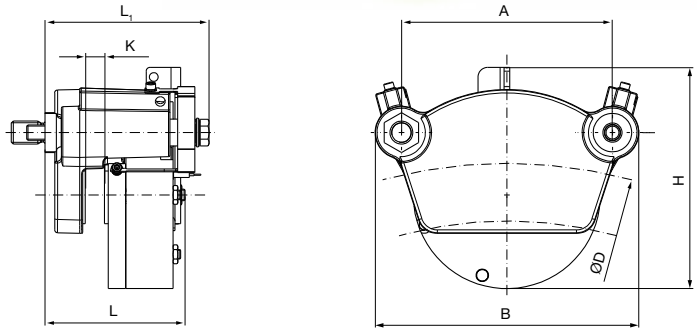

Size 10

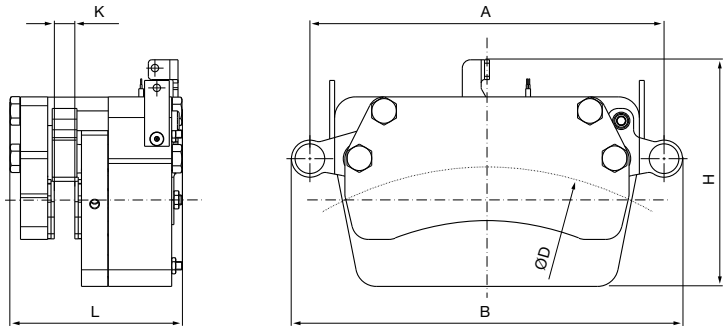

Technical Data and Dimensions				Size			
				6	7	8	10
Braking torque [1] **"performance-optimised"** Example for brake disk diameter D = 1000 mm		M	[Nm]	1550	1777	2328	4876
Braking torque [1] **"noise-optimised"** Example for brake disk diameter D = 1000 mm		M	[Nm]	1244	1534	1862	4020
Brake disk	**Outer diameter**	D	[mm]	270 – ∞	390 – 1500	390 – ∞	650 – 1500
	Width [2]	K	[mm]	15	15	20	25
Brake	**Bolt distance**	A	[mm]	140	180	220	430
	Length	L	[mm]	125	138	146	198
	Length (with alignment mechanism for Sizes 6 – 8)	L_1	[mm]	161	161	173	-
	Height	H	[mm]	198	225.5	229	275
	Width	B	[mm]	184	227	275	475

1) Tolerance -0 % / +60 % 2) Other brake disk widths are possible

For detailed technical data and dimensions, please see catalogue: ROBA®-diskstop® K.894.V_ _._ _

ROBA®-duplostop®
The doubled safety brake for elevator drives

Performance Characteristics

- **Highest safety system of two independent brake circuits according to EN 81**
- **Also licensed as protection against excessive upward speeds when fitted with release monitoring**
- **Exceptionally short construction**
- **Cost-effective redundant elevator brake**
- **Brakes can be individually switched and inspected**
- **Mounting the encoder does not lengthen the construction**
- **Simple installation**
- **No air gap adjustment necessary**
- **Virtually silent due to patented *mayr*® noise damping**
- **Brake release via rotating hand release (for Bowden cable or with hand release lever) is a possible option**

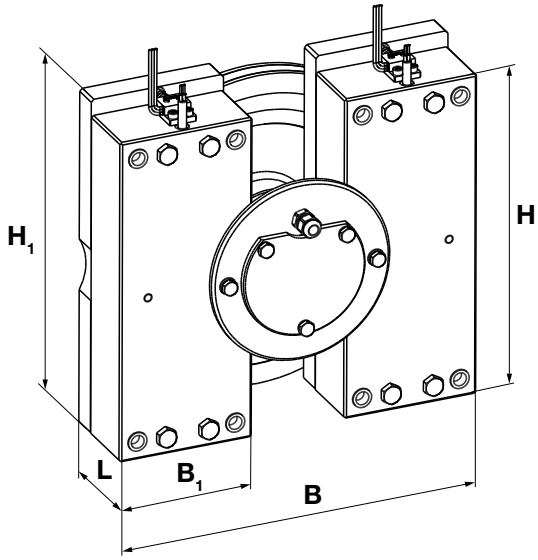

Technical Data and Dimensions				Size						
				200	400		600	800	1000	1500
					short	long				
Braking torque 1)		M	[Nm]	2 x 200	2 x 410	2 x 430/480	2 x 590	2 x 830	2 x 1015	2 x 1700
	(with overexcitation)	M	[Nm]	2 x 240	–	2 x 490/540	2 x 670	2 x 930	2 x 1200	–
Shaft Ø	Directly toothed motor shaft DIN 5480 2) 3)		[mm]	60 x 2,5 x 22	65 x 3 x 20	72 x 3 x 22	72 x 3 x 22	82 x 3 x 26	90 x 3 x 28	95 x 3 x 30
			[mm]	65 x 3 x 20	67 x 3 x 21	82 x 3 x 26	82 x 3 x 26	90 x 3 x 28 *	98 x 4 x 23 *	98 x 4 x 23
			[mm]	67 x 3 x 21	72 x 3 x 22	90 x 3 x 28	–	98 x 4 x 23 *	–	–
Brake	Length (with rotor)	L	[mm]	86.1/91.1 *	96.1	101.1	101.1	108.1	108.1	116
	Height	H	[mm]	244	268	290	298	336	380	458
		H_1	[mm]	256	280	303	311	349	393	458
	Width	B	[mm]	270	315	290/355	355	375	395	480
	Single brake	B_1	[mm]	100	120	120	140	150	160	200

1) Tolerance +60 % 2) Design with toothed hub available on request 3) spline length on request *) Dimension valid for braking torque with overexcitation

For detailed technical data and dimensions, please see brochure: ROBA®-duplostop® P.Q8012.V_ _._ _

ROBA®-twinstop®
The dual-circuit safety brake for elevator drives

Performance Characteristics

- **Highest safety system of two independent brake circuits according to EN 81**
- **Also licensed as protection against excessive upward speeds when fitted with release monitoring**
- **Exceptionally short construction**
- **Cost-effective redundant elevator brake**
- **Brakes can be individually inspected electrically**
- **Mounting the encoder does not lengthen the construction or add further parts**
- **Installation of microswitches for function monitoring possible**
- **No air gap adjustment necessary**
- **Virtually silent due to patented *mayr*® noise damping**
- **Brake release via rotating hand release (for Bowden cable or with hand release lever) is a possible option**

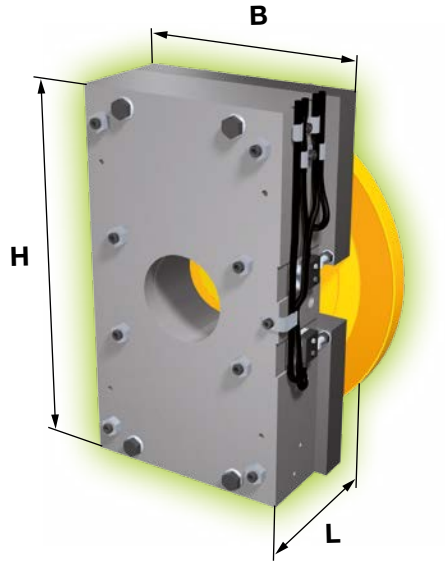

Design

The ROBA®-twinstop® consists of a compact brake block with two independent brake circuits which is fixed to the motor using four screws. In comparison to brake systems with brakes which are positioned behind each other, it has an extremely short construction length. Even the addition of a compact encoder does not alter this length, as it is located in the central bore.

Function

The redundant electromagnetic safety brake ROBA®-twinstop® is spring applied. If the power is switched off, or on power failure / EMERGENCY STOP, the brake ensures reliable and secure stops in any position.

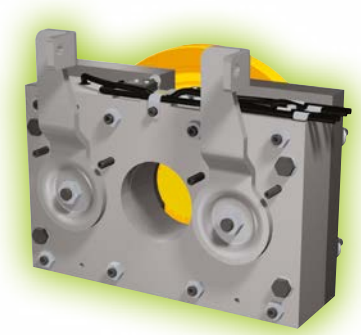

ROBA®-twinstop®
Design with rotating hand release for Bowden cable

Technical Data and Dimensions				Sizes [2]						
				125	150	180	225		250	350
Nominal braking torque		M_N	[Nm]	2 x 125	2 x 150	2 x 180	2 x 225	2 x 250	2 x 250	2 x 350
Shaft Ø	**Directly toothed motor shaft DIN 5480** [1]		[mm]	45 x 2 x 21	55 x 2 x 26	50 x 2 x 24	55 x 2 x 26	55 x 2 x 26	65 x 3 x 20	65 x 3 x 20
Brake	Length (with rotor)	L	[mm]	85.6	90.6	92.6	97.6	97.6	100.6	100.6
	Height	H	[mm]	212	250	237	267	267	290	300
	Width	B	[mm]	200	170	200	200	200	170	210
	Rotor	R	[mm]	181	223	196	196	222.5	253	273

1) design with toothed hub available on request
2) Further Sizes available on request

For detailed technical data and dimensions, please see brochure: ROBA®-twinstop® P.Q8012.V_ _._ _

ROBA®-quatrostop
The extremely compact multiple circuit brake for stage technology

Performance Characteristics

- **Highest safety due to redundant system**
- **Braking torque is not doubled**
- **Reduces loads on the mounted parts**
- **Allows lighter connection constructions**
- **Low-noise operation**
- **Brakes gently**
- **Switches extremely quickly**
- **Saves costs**
- **Integrated, protected sensors can be mounted**

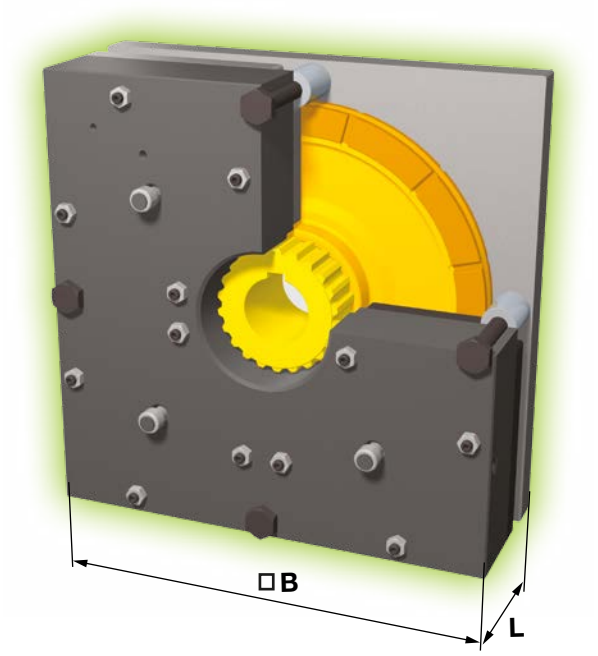

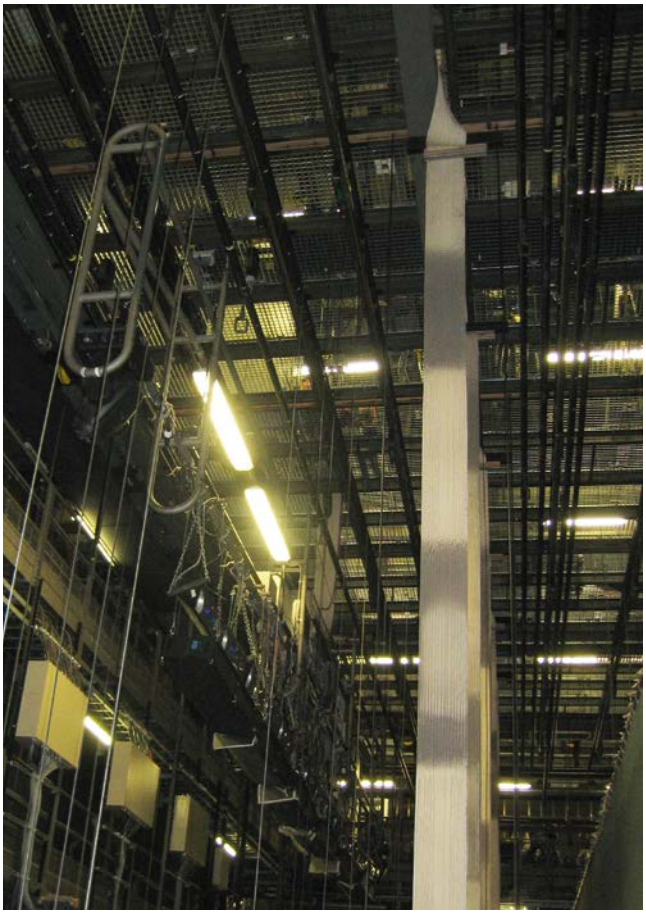

Low increase in braking torque due to four individual brake circuits

On redundant systems with two brake circuits, one circuit must produce the entire nominal braking torque required. If both brakes are functioning correctly, the increase in braking torque is 100 percent. The system brakes with double the nominal braking torque.

In the new ROBA®-quatrostop braking system, four brake circuits work independently of each other. Together, three brake circuits produce the required nominal braking torque. The fourth circuit ensures the necessary redundancy, in order to fulfil the safety requirements for elevator technology.

In malfunction-free operation, the system has a braking torque increase of a mere 33 percent.

Technical Data, Dimensions				Size		
				200		
Nominal braking torque minimal		M_N	[Nm]	4 x 50 (150 + 50)	4 x 55 (165 + 55)	4 x 67 (201 + 67)
Shaft Ø			[mm]	38		
Brake	Length	L	[mm]	92.5		
	Height	B	[mm]	261		
	Width					

For detailed technical data and dimensions, please contact the manufacturers.

ROBA-stop®-S
The waterproof, robust monoblock brake

Performance Characteristics

- **Completely enclosed and sealed design in Protection IP67**
- **Robust, single-part monoblock housing**
- **All components are corrosion-protected**
- **High friction work is permitted**
- **Can be used in extreme ambient conditions**
- **Long-distance diagnosis via integration of release monitoring and wear monitoring**
- **Anti-condensation heating system to avoid condensation formation inside the brake**

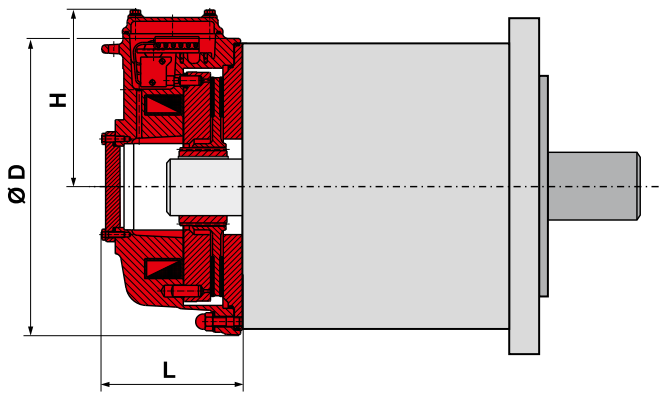

Application fields

- ❑ **Harbour/ship/seawater**
- ❑ **Outdoor applications**
- ❑ **Steel works**
- ❑ **Crane systems**
- ❑ **Heavy industries**
- ❑ **Recycling plants**
- ❑ **Environmental technology**

Technical Data and Dimensions				Size			
				8	9	10	11
Braking torque [1]		M	[Nm]	100	200	400	800
Shaft Ø			[mm]	25 – 45	25 – 50	25 – 60	55 – 75
Brake	**Outer Ø**	D	[mm]	240	270	310	450
	Length	L	[mm]	122	132.5	152	194.1
	Height of terminal box	H	[mm]	155	167	185	217

1) Tolerance +40 % / -20 %

For detailed technical data and dimensions, please see catalogue: **ROBA-stop® K.800.V_ _._ _**

Functions of the DC Voltage Modules

no overexcitation and no power reduction		overexcitation (short separation time) and / or power reduction (reduction in coil capacity and temperature)						Protection circuit	Safe Brake Control
		variable output voltage					fixed output voltage		
		without DC-side dis-connection	integrated DC-side disconnection						
Type 024.000.6 **Half-wave Rectifier** **Page 22**	**Type 025.000.6** **Bridge Rectifier** **Page 22**	**Type 017._00.2** **ROBA®-switch** **Page 23**	**Type 017.110.2** **ROBA®-switch** **Page 24**	**Type 018.000.2** **ROBA®-switch 24V** **Page 25**	**Type 018.100.2** **ROBA®-switch 24V** **Page 26**	**Type 028.100.2** **ROBA®-brake-checker** **Page 27**	**Type 019._00.2** **ROBA®-multiswitch** **Page 28**	**Type 070.000.6** **Spark Quen-ching Unit** **Page 29**	**Type 021.100.2** **ROBA®-SBCplus** **Page 30**
Application									
Standard application Compact design	Standard application, preferred for noise-damped brakes Compact design	Allows short separation time	Allows short separation time + short connection time no wear on contacts	Allows short separation time + short connection time For input voltage 24 VDC max. output current 2.5 A	max. output current 5 A	+ integrated release and drop-out recogni-tion for permitted brakes For input voltages 24 VDC / 48 VDC max. output current 10 A / 5 A no wear on contacts	Allows short separation time + consistently controlled output voltage with variable input voltage	Reductions in switch-off voltage and wear on contacts	Controls and monitors up to two ROBA-stop® safety brakes, especially in applications, which have to fulfill requirements regarding person protection according to the standards for functional reliability, such as for example ISO 13849 and IEC 62061 Patent pending

For detailed information on our DC voltage modules, please go to: www.mayr.com

mayr® your reliable partner

Half-wave and bridge rectifiers Type 02_.000.6

c UL us E189728 CE

Application

Rectifiers are used to connect DC consumers to alternating voltage supplies, for example electromagnetic brakes and clutches (ROBA-stop®, ROBA-quick®, ROBATIC®), electromagnets, electrovalves, contactors, switch-on safe DC motors, etc.

Function

The AC input voltage (VAC) is rectified (VDC) in order to operate DC voltage units. Also, voltage peaks, which occur when switching off inductive loads and which may cause damage to insulation and contacts, are limited and the contact load reduced.

Electrical connection (Terminals)

1 + 2 Input voltage
3 + 4 Connection for an external switch for DC-side switching
5 + 6 Coil
7 – 10 Free nc terminals (only for Size 2)

Order Number

__ / 0 2 __ . 0 0 0 . 6

Size 1 to 4	4 Half-wave rectifier 5 Bridge rectifier

Dimensions (mm)

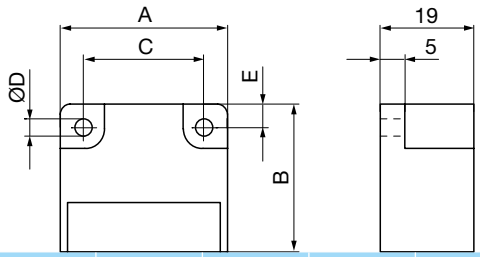

Size	A	B	C	ØD	E
1	34	30	25	3.5	4.5
2	54	30	44	4.5	5.0
3/4	64	30	54	4.5	5.0

Accessories: Mounting bracket set for 35 mm rail acc. EN 60715: Article No. 1803201.

Technical Data

				Bridge rectifier		Half-wave rectifier			
Calculation output voltage				VDC = VAC x 0.9		VDC = VAC x 0.45			
Type				**1/025**	**2/025**	**1/024**	**2/024**	**3/024**	**4/024**
Max. input voltage	± 10%	U_{AC}	[VAC]	230	230	400	400	500	600
Max. output voltage		U_{DC}	[VDC]	207	207	180	180	225	270
Output current	≤ 50°C	I_{RMS}	[A]	2.5	2.5	3.0	4.0	4.0	4.0
	at max. 85 °C	I_{RMS}	[A]	1.7	1.7	1.8	2.4	2.4	2.4
Max. coil nominal capacity at	U_{AC} = 115 VAC, ≤ 50 °C	P_N	[W]	260	260	-	-	-	-
	U_{AC} = 115 VAC, up to 85 °C	P_N	[W]	177	177	-	-	-	-
	U_{AC} = 230 VAC, ≤ 50 °C	P_N	[W]	517	517	312	416	416	416
	U_{AC} = 230 VAC, up to 85 °C	P_N	[W]	352	352	187	250	250	250
	U_{AC} = 400 VAC, ≤ 50 °C	P_N	[W]	-	-	540	720	720	720
	U_{AC} = 400 VAC, up to 85 °C	P_N	[W]	-	-	324	432	432	432
	U_{AC} = 500 VAC, ≤ 50 °C	P_N	[W]	-	-	-	-	900	900
	U_{AC} = 500 VAC, up to 85 °C	P_N	[W]	-	-	-	-	540	540
	U_{AC} = 600 VAC, ≤ 50 °C	P_N	[W]	-	-	-	-	-	1080
	U_{AC} = 600 VAC, up to 85 °C	P_N	[W]	-	-	-	-	-	648
Peak reverse voltage			[V]	1600	1600	2000	1600	2000	2000
Rated insulation voltage		U_{RMS}	[V_{RMS}]	320	320	500	500	630	630
Pollution degree (insulation coordination)				1	1	1	1	1	1
Device Fuses				To be included in the input voltage line.					
Recommended microfuse switching capacity H The microfuse corresponds to the max. possible connection capacity. If fuses are used corresponding to the actual capacities, the permitted limit integral I^2t must be observed on selection.				FF 3.15 A	FF 3.15 A	FF 4 A	FF 5 A	FF 5 A	FF 5 A
Permitted limit integral		I^2t	[A^2s]	40	40	50	100	50	50
Protection				IP65 components, encapsulated / IP20 terminals					
Terminals				Cross-section 0.14 – 1.5 mm^2 (AWG 26-14)					
Ambient temperature			[°C]	- 25 up to + 85					
Storage temperature			[°C]	- 40 up to + 85					
Conformity markings				UL, CE	UL, CE	UL, CE	UL, CE	UL, CE	CE
Installation conditions				The installation position can be user-defined. Please ensure sufficient heat dissipation and air convection! Do not install near to sources of intense heat!					

ROBA®-switch Type 017._00.2

E189728

Application

ROBA®-switch fast acting rectifiers are used to connect DC consumers to alternating voltage supplies, for example electromagnetic brakes and clutches (ROBA-stop®, ROBA®-quick, ROBATIC®) as well as electromagnets, electrovalves, etc.

Fast acting rectifier ROBA®-switch 017._00.2
- Consumer operation with overexcitation or power reduction
- Input voltage: 100 – 500 VAC
- Maximum output current I_{RMS}: 3 A at 250 VAC
- UL-approved

Function

The ROBA®-switch is used for operation at an input voltage of between 100 and 500 VAC, depending on the size. It can switch internally from bridge rectification output voltage to half-wave rectification output voltage. The bridge rectification time can be modified from 0.05 to 2 seconds by exchanging the external resistor (R_{ext}).

Electrical connection (Terminals)

1 + 2 Input voltage (fitted protective varistor)
3 + 4 Connection for external contact for DC-side switch-off
5 + 6 Output voltage (fitted protective varistor)
7 + 8 R_{ext} for bridge rectification time adjustment

Technical Data

Input voltage	see Table 1
Output voltage	see Table 1
Protection	IP65 components, IP20 terminals, IP10 R_{ext}
Terminal nom. cross-section	1.5 mm² (AWG 22-14)
Ambient temperature	- 25 °C up to + 70 °C
Storage temperature	- 40 °C up to + 70 °C

ROBA®-switch Sizes, Table 1

			Size			
			Type 017.000.2		Type 017.100.2	
			10	20	10	20
Input voltage ±10%	U_{AC}	[VAC]	100 – 250	200 – 500	100 – 250	200 – 500
Output voltage	U_{bridge}	[VDC]	90 – 225	180 – 450	90 – 225	180 – 450
	$U_{half\text{-}wave}$	[VDC]	45 – 113	90 – 225	45 – 113	90 – 225
Output current						
at ≤ 45 °C	I_{eff}	[A]	2.0	1.8	3.0	2.0
at max. 70 °C	I_{eff}	[A]	1.0	0.9	1.5	1.0
Conformity markings			c UL us CE	c UL us up to 300 V CE	c UL us CE	c UL us CE

Order Number

__ / 0 1 7 . __ 0 0 . 2

Size	UL-approved
10	0 up to 300 V
20	1 up to 500 V

Dimensions (mm)

Type 017.000.2

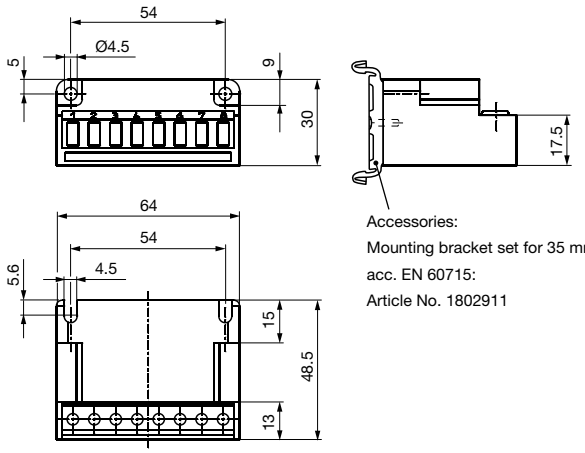

Accessories:
Mounting bracket set for 35 mm rail acc. EN 60715:
Article No. 1802911

Type 017.100.2

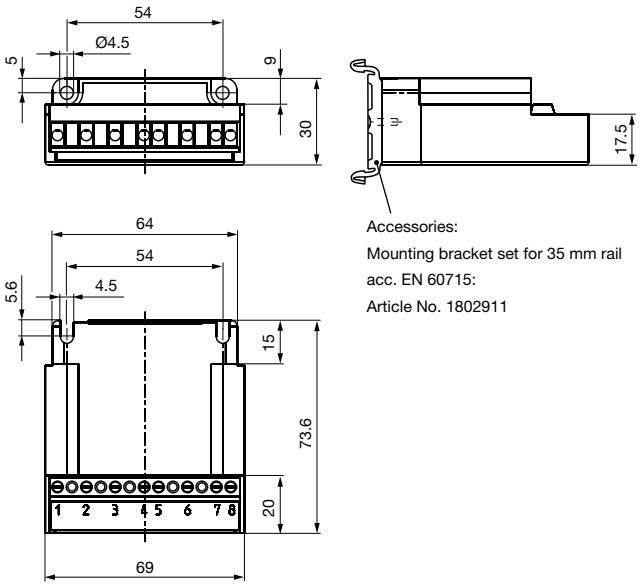

Accessories:
Mounting bracket set for 35 mm rail acc. EN 60715:
Article No. 1802911

ROBA®-switch Type 017.110.2

E189728

Application

ROBA®-switch fast acting rectifiers are used to connect DC consumers to alternating voltage supplies, for example electromagnetic brakes and clutches (ROBA-stop®, ROBA®-quick, ROBATIC®) as well as electromagnets, electrovalves, etc.

Fast acting rectifier ROBA®-switch 017.110.2

- Integrated DC-side disconnection (shorter connection time t_1)
- Consumer operation with overexcitation or power reduction
- Input voltage: 100 – 500 VAC
- Maximum output current I_{RMS} : 1.5 A
- UL-approved

The ROBA®-switch with integrated DC-side disconnection is not suitable for being the only safety disconnection in applications!

Function

The ROBA®-switch is used for operation at an input voltage of between 100 and 500 VAC, depending on the size. It can switch internally from bridge rectification U_O output voltage to half-wave rectification U_H output voltage. The bridge rectification time can be modified from 0.05 to 2 seconds by exchanging the external resistor (R_{ext}).

In addition, the ROBA®-switch features integrated DC-side disconnection. In contrast to the usual DC-side disconnection, no further protective measures or external components are required. The DC-side disconnection is activated as a standard measure (terminals 3 and 4 are not wired) and causes short switching times on the electromagnetic consumer.

The integrated DC-side disconnection is deactivated by fitting a bridge between the terminals 3 and 4, and the coil is de-energised via the freewheeling diode. This has the advantages of gentler braking actions and quieter switching noise. However, this substantially lengthens the switching times (approx. 6 – 10x).

Dimensions (mm)

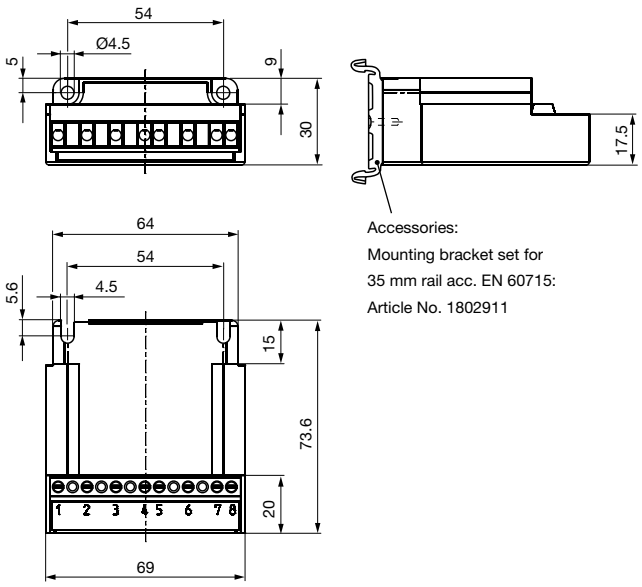

Accessories:
Mounting bracket set for 35 mm rail acc. EN 60715:
Article No. 1802911

Electrical connection (Terminals)

1 + 2	Input voltage (fitted protective varistor)
3 + 4	Switching between DC and AC-side disconnection
5 + 6	Output voltage (fitted protective varistor)
7 + 8	R_{ext} for bridge rectification time adjustment

Technical Data

Input voltage	see Table 1
Output voltage	see Table 1
Protection	IP65 components, IP20 terminals, IP10 R_{ext}
Terminal nom. cross-section	1.5 mm² (AWG 22-14)
Ambient temperature	-25 °C up to +70 °C
Storage temperature	-40 °C up to +70 °C

ROBA®-switch Sizes, Table 1

				Size 10	Size 20
Input voltage ±10%		U_I	[VAC]	100 – 250	200 – 500
Output voltage		U_O	[VDC]	90 – 225	180 – 450
		U_H	[VDC]	45 – 113	90 – 225
Output current	at ≤ 45 °C	I_{RMS}	[A]	1.5	1.5
	at max. 70 °C	I_{RMS}	[A]	0.75	0.75
Conformity markings					

Order Number

__	/	0	1	7	.	1	1	0	.	2

Size
10
20

ROBA®-switch 24V Type 018.000.2

Application

ROBA®-switch 24V fast switching modules are used to operate DC consumers with overexcitation or power reduction, for example electromagnetic brakes and clutches (ROBA-stop®, ROBA®-quick, ROBATIC®), electromagnets, electrovalves, etc.

Fast switching module ROBA®-switch 24V 018.000.2

- Consumer operation with overexcitation or power reduction
- Integrated DC-side disconnection (shorter connection time t_1)
- Input voltage: 24 VDC
- Max. output current I_{RMS}: 2.5 A

CAUTION

The ROBA®-switch 24V with integrated DC-side disconnection is not suitable for being the only safety disconnection in applications!

Function

The ROBA®-switch 24V units are used for an input voltage of 24 VDC. They can switch internally, meaning that the output voltage switches to holding voltage from the input voltage (= overexcitation voltage) via pulse-width modulation using 20 kHz. The overexcitation time and holding voltage can be switched.

Electrical Connection (Terminals)

1	Control input
2 + 3	Input voltage, ground
4 + 5	Input voltage +24V
6	Output voltage +
7	Output voltage -
8 + 9	Selection of overexcitation time
9 + 10	Selection ofholding voltage

Technical Data

Input voltage U_I	24 VDC (18 – 32 VDC) SELV/PELV
Output voltage U_O	Input voltage U_I
Output voltage U_H	see Table 1
Output current I_{RMS} at ≤ 45 °C	2.5 A
Output current I_{RMS} at max. 70 °C	1.25 A
Protection	IP65 components, IP20 terminals
Terminal nominal cross-section	1.5 mm² (AWG 22-14)
Ambient temperature	-25 °C up to +70 °C
Storage temperature	-40 °C up to +70 °C

Order Number

__	/ 0	1	8	. 0	0	0	. 2
▲							
Size 1							

Example:

Order number 1 / 018.000.2 and article number 8237581

Dimensions (mm)

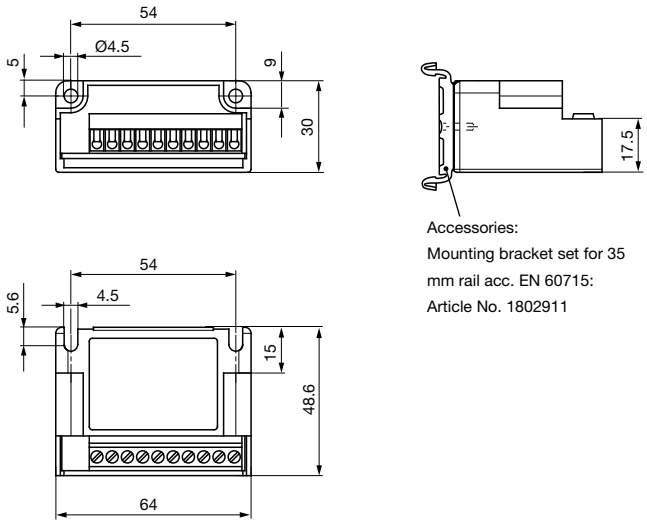

Accessories:
Mounting bracket set for 35 mm rail acc. EN 60715:
Article No. 1802911

ROBA®-switch 24 V, Table 1

Article number	Overexcitation Time t_o [ms]		Holding voltage U_H [VDC]	
	Without	with	Without	with
	Bridge 8+9		Bridge 9+10	
8237581	450	150	½ x U_I	⅔ x U_I

ROBA®-switch 24V Type 018.100.2

E189728

Application

ROBA®-switch 24V fast switching modules are used to operate DC consumers with overexcitation or power reduction, for example electromagnetic brakes and clutches (ROBA-stop®, ROBA®-quick, ROBATIC®), electromagnets, electrovalves, etc.

Fast switching module ROBA®-switch 24V 018.100.2

- Consumer operation with overexcitation or power reduction
- Integrated DC-side disconnection (shorter connection time t_1)
- Input voltage: 24 VDC
- Max. output current I: 5 A 5 A
- UL-approved

CAUTION

The ROBA®-switch 24V with integrated DC-side disconnection is not suitable for being the only safety disconnection in applications!

Function

The ROBA®-switch 24V units are used for an input voltage of 24 VDC. They can switch internally, meaning that the output voltage switches to holding voltage from the input voltage (=overexcitation voltage) via pulse-width modulation using 20 kHz. The overexcitation time can be adjusted via a DIP switch to 150 ms, 450 ms, 1 s, 1.5 s and 2.15 s. The holding voltage can be adjusted via a further DIP switch to ¼, ⅓, ½ and ⅔ of the input voltage (equals 6 V, 8 V, 12 V and 16 V at an input voltage of 24 V).

In addition, the ROBA®-switch 24V features integrated DC-side disconnection. In contrast to the usual DC-side disconnection, no further protective measures or external components are required. The DC-side disconnection is activated in standard mode and causes short switching times on the electromagnetic consumer. This can, however, be deactivated by installing a bridge between terminals 7 and 8 in order to produce soft brakings and quieter switching noises. However, this substantially lengthens the switching times (approx. 6 – 10x).

Dimensions (mm)

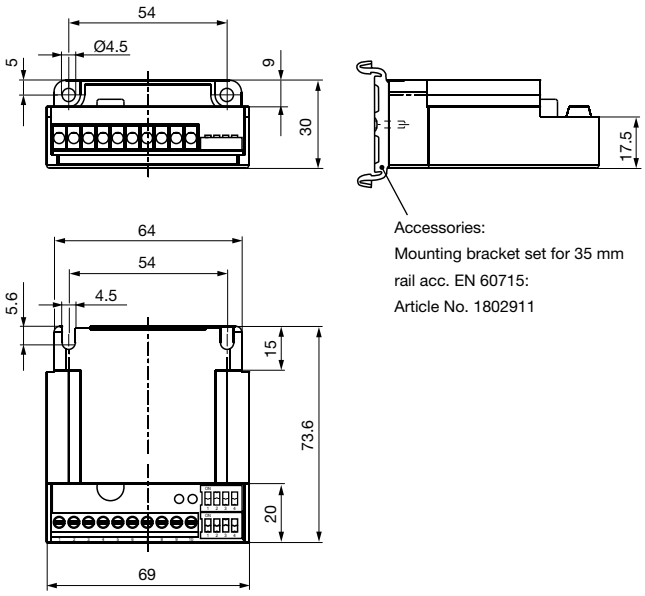

Accessories:
Mounting bracket set for 35 mm rail acc. EN 60715:
Article No. 1802911

Electrical Connection (Terminals)

2 + 3	Input voltage, ground
4	Control input
5 – 7	Input voltage + 24 VDC
8 + 9	Output voltage +
10	Output voltage -

Technical Data

Input voltage U_I	24 VDC + 20 % / - 10 % SELV/PELV
Output voltage U_O	Input voltage U_I
Output voltage U_H	¼, ⅓, ½, ⅔ x U_I ± 20 % can be selected via a DIP switch
Output current I_{RMS} at ≤ 45 °C	5.0 A
Output current I_{RMS} at max. 70 °C	2.5 A
Protection	IP00
Terminal nominal cross-section	1.5 mm² (AWG 22-14)
Ambient temperature	-25 °C up to +70 °C
Storage temperature	-40 °C up to +70 °C

Order Number

__	/	0	1	8	.	1	0	0	.	2	

Size
1

Application

ROBA®-brake-checker monitoring modules are used to operate DC consumers.
Motion monitoring of the armature disk for released ROBA-stop® safety brakes is possible.

Monitoring module ROBA®-brake-checker 028.100.2

- Consumer operation with overexcitation and/or power reduction
- Controlled holding voltage (on reduction)
- Simple adjustment of holding voltage and overexcitation time via a DIP switch
- Fast or slow switch off
- Armature disk motion recognition (release and drop-out recognition)
- Preventative function monitoring (Wear recognition and error recognition, functional reserve)
- Wide input voltage range
- Maximum output current I = 10 A / 5 A
- Maximum overexcitation current I_O = 20 A / 10 A
- Automatic reduction of the holding voltage U_H
- Electrical isolation of performance terminal and control terminal

CAUTION

The ROBA®-brake-checker with integrated DC-side disconnection is not suitable for being the only safety disconnection in applications!

Function

The ROBA®-brake-checker monitoring module is intended for use with an input voltage of 24 or 48 VDC. The module monitors the movement of the armature disk and emits the determined switching condition via control terminal 3 (signal output).
Critical conditions (line breakages, wear) can be recognised and the respective signal can be emitted via control terminal 7 (error output).

After a brake-specific overexcitation time period, the integrated automatic voltage mechanism mode adjusts to the pre-set reduction voltage. The automatic voltage mechanism mode can be switched off using a DIP switch.

In case of switched-off automatic voltage mechanism mode, the overexcitation time can be adjusted manually to 150 ms, 450 ms, 1 s, 1.5 s, and 2 s using the DIP switch.

Electrical Connection (Terminals)

Power Terminal

1	Supply voltage +24 VDC / +48 VDC
2	Output voltage +
3	Output voltage -
4	Supply voltage 0 VDC

Signal Terminal

1	Supply voltage 0 VDC
2	Switch-off fast/slow (input)
3	Signal output (release monitoring)
4	24 V (auxiliary voltage for bridging)
5	Supply voltage +24 VDC
6	Start (input)
7	Error output max. 300 mA

Technical Data

Input voltage	see Table 1
Output voltage	see Table 1
Protection	IP65 components, IP20 terminals, IP20 DIP switch
Terminal nominal cross-section	
Power terminals	4 mm², (AWG 20-12)
Signal terminals	1.5 mm², (AWG 30-14)
Ambient temperature	-25 °C up to +70 °C
Storage temperature	-40 °C up to +105 °C

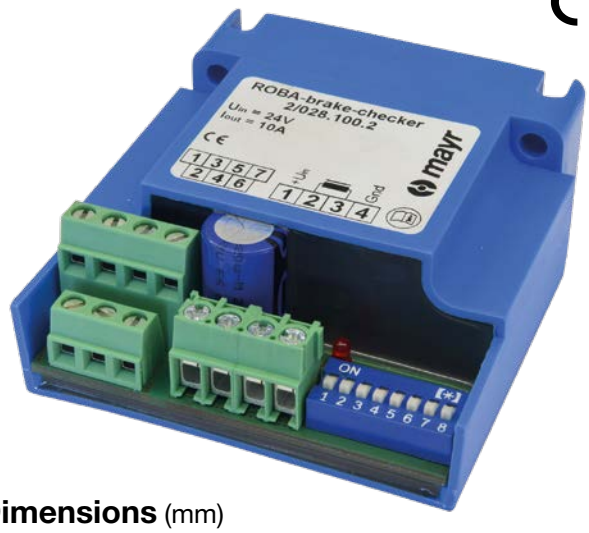

Dimensions (mm)

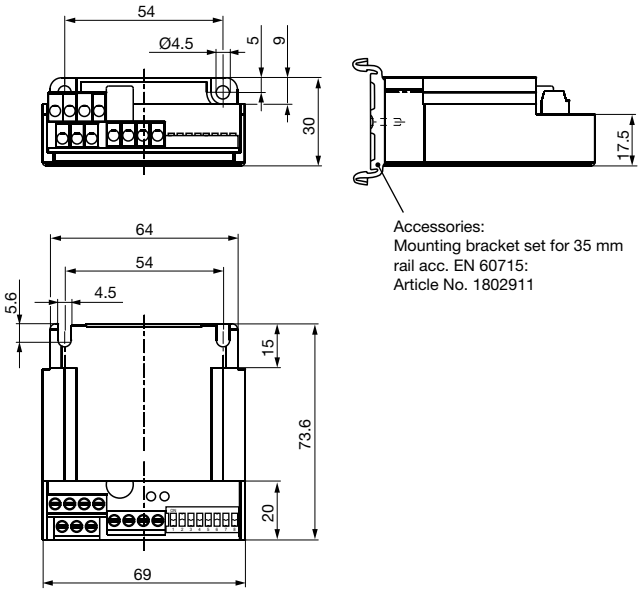

Accessories:
Mounting bracket set for 35 mm rail acc. EN 60715:
Article No. 1802911

ROBA®-brake-checker Sizes, Table 1

				Sizes 2 24 VDC		Sizes 4 48 VDC	
Input voltage, power terminal	SELV/PELV	U_I	[VDC]	18 – 30		42 – 54	
Input voltage, signal terminal		U_I	[VDC]	24 (19 – 28)			
Output voltage	± 5 %	U_O	[VDC]	Input voltage U_I			
	± 5 %	U_H	[VDC]	6	8	12	16
				12	16	24	32
Output current	at ≤ 45 °C	I_{RMS}	[ADC]	10.0		5.0	
	at max. 70 °C	I_{RMS}	[ADC]	5.0		2.5	
Conformity markings				CE		CE	

Order Number

__	/	0	2	8	.	1	0	0	.	2

Sizes
2
4

ROBA®-multiswitch Type 019._00.2

E189728

Application

ROBA®-multiswitch fast acting rectifiers are used to connect DC consumers to alternating voltage supplies, for example electromagnetic brakes and clutches (ROBA-stop®, ROBA®-quick, ROBATIC®) as well as electromagnets, electrovalves, etc.

Fast acting rectifier ROBA®-multiswitch 019._00.2

- Consistently controlled output voltage in the entire input voltage range
- Consumer operation with overexcitation or power reduction
- Input voltage: 100 – 500 VAC
- Max. output current I_{RMS}: 2 A; 4.5 A
- UL-approved

ROBA®-multiswitch units are not suitable for all applications, e.g. use of the ROBA®-multiswitch when operating noise-damped brakes is not possible without taking additional measures. The product's suitability should be checked before use.

The ROBA®-multiswitch is used for operation at an input voltage of between 100 and 500 VAC, depending on the size. After switch-on, it emits the rectified bridge voltage for 50 ms and then adjusts automatically to a pre-programmed overexcitation voltage. After the overexcitation time ends, it regulates to the permanently programmed holding voltage. For the overexcitation voltage and holding voltage values of the standard design, please see Table 1. On special designs, deviating values are possible.
The overexcitation time can be adjusted via a DIP switch to 150 ms, 450 ms, 1 s, 1.5 s and 2 s.

Electrical connection (Terminals)

1 + 2 Input voltage (fitted protective varistor)
3 + 4 Connection for external contact for DC-side switch-off
5 + 6 Output voltage (fitted protective varistor)

Technical Data

Input voltage see Table 1	
Frequency	50 – 60 Hz
Output voltage see Table 1	
Output current	
Type 019.100.2	2 A bei ≤ 45 °C; 1 A at max. 70 °C
Type 019.200.2	4.5 A bei ≤ 45 °C; 2.25 A at max. 70 °C
Protection	IP65 components, IP20 terminals, IP20 DIP switch
Terminal nom. cross-section	1.5 mm² (AWG 22-14)
Ambient temperature	-25 °C up to +70 °C
Storage temperature	-40 °C up to +70 °C

Order Number

__	/ 0	1	9 .	__	0	0 .	2

Size			
10	1	max. 2.0 A	I_{RMS}
20	2	max. 4.5 A	I_{RMS}

Example:

Order number 20 / 019.100.2 and article number 8225580

Dimensions (mm)

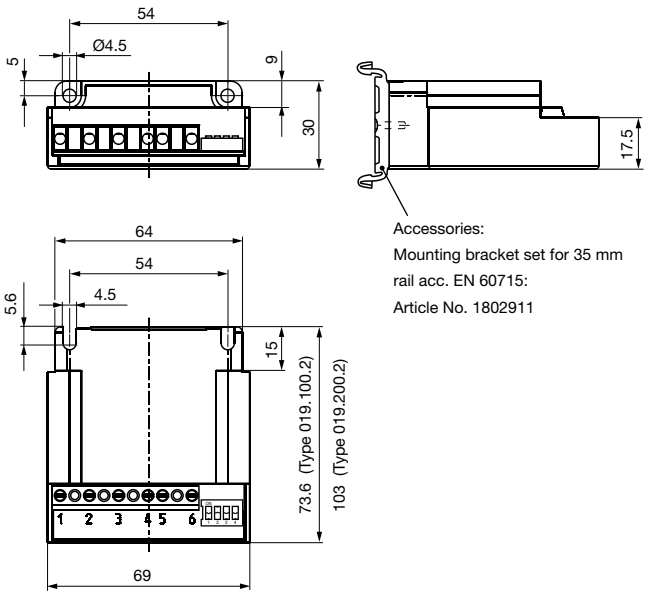

Accessories:
Mounting bracket set for 35 mm rail acc. EN 60715:
Article No. 1802911

ROBA®-multiswitch Sizes, Table 1

Size	Type	Input voltage * ±10 % acc. EN 50160 [VAC]	Output voltage * ±10% U_O** [VDC]	U_O** [VDC]	Article number
10	019.100.2	100 – 275	90	52	8186586
20	019.100.2	200 – 500	180	104	8185591
	019.200.2	200 – 500	180	104	8242954
	019.100.2	230	207	30	8225580
	019.200.2	230	207	30	8237887
	019.100.2	300 – 500	240	52	8220914

* On special designs, deviating values are possible.
The values stated on the Type tag are decisive.

** U_O : overexcitation voltage; U_H : Holding voltage

Spark quenching unit Type 070.000.6

E189728

Application

Reduces spark production on the switching contacts occurring during DC-side switch-off of inductive loads.

- Voltage limitation according to VDE 0580 2000-07, Item 4.6.
- Reduction of EMC-disturbance by voltage rise limitation, suppression of switching sparks.
- Reduction of brake engagement times by a factor of 2 – 4 compared to freewheeling diodes.

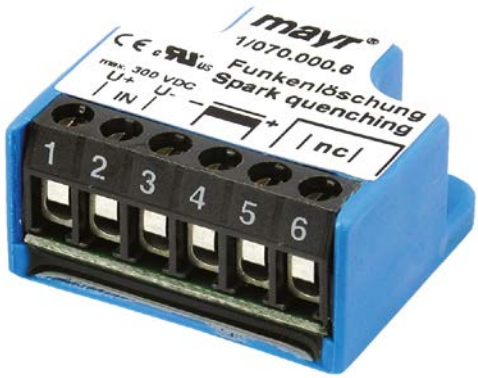

Function

The spark quenching unit will absorb voltage peaks resulting from inductive load switching, which can cause damage to insulation and contacts. It limits these to 70 V and reduces the contact load. Switching products with a contact opening distance of > 3 mm are suitable for this purpose.

Dimensions (mm)

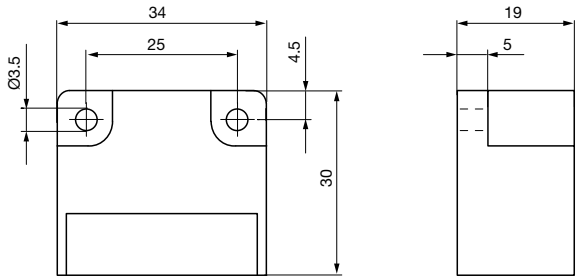

Electrical Connection (Terminals)

1 (+)	Input voltage
2 (–)	Input voltage
3 (–)	Coil
4 (+)	Coil
5	Free nc terminal
6	Free nc terminal

Technical Data

Input voltage	max. 300 VDC, max. 615 V_{peak} (rectified voltage 400 VAC, 50/60 Hz)
Switch-off energy	max. 9 J / 2 ms
Power dissipation	max. 0.1 Watt
Rated voltage	
nc terminals	250 V
Protection	IP65 components, IP20 terminals
Ambient temperature	-25 °C up to +85 °C
Storage temperature	-40 °C up to +85 °C
Max. conductor cross-section	2.5 mm^2, (AWG 26-12)
Max. terminal tightening torque	0.5 Nm

Accessories

Mounting bracket set for 35 mm rail acc. EN 60715:
Article No. 1803201

Order Number

__	/	0	7	0	.	0	0	0	.	6
▲										
Size 1										

ROBA®-SBCplus
The safe brake control - for use up to PLe and SIL CL3

Application

The safe brake control ROBA®-SBCplus is used to control and monitor two ROBA-stop® safety brakes, especially in applications, which have to fulfill requirements regarding person protection according to the standards for functional reliability, such as for example ISO 13849 and IEC 62061.

Characteristics:

- Safe electronic switching of two brakes
- Input voltage power circuit 24 - 48 VDC
- Connection for up to 2 brakes up to 4.5 A / 24 VDC or 2.25 A / 48 VDC (108 W)
- Output voltage (holding voltage) can be selected 6,8,12,24,48 VDC
  → Power reduction, temperature reduction, electricity costs reduction
- Overexcitation time configurable
- Feedback inputs release monitoring for proximity switch or microswitch
- Monitoring for plausibility of the feedback
  → Error diagnostics of the brake
- Status and error outputs for feedback to the control
- No mechanic contacts for controlling and monitoring
  → High reliability, no wear, independent of cycle frequency and cycle rate
- Fast (“DC-side”) or slow (“AC-side”) switch off possible
- Galvanic separation between the control part and the power part
  → Prevention of EMC issues
- Four integrated functions:
  Contactor, 24 VDC fast-acting rectifier, safety relay, spark quenching
- Safe holding voltage and overexcitation time
- Safety functions are programmed into the ROBA®-SBCplus and only have to be parameterised
  → Plausibility check integrated and must not be programmed and validated
- Applicable up to PLe and SIL CL3, Type examination TÜV Süd (German Technical Inspectorate)

Maximum switching reliability

The brake control must safely interrupt the current in the magnetic coil on switching off the brake. The ROBA®-SBCplus module works with wear-free electronic semiconductors and thus achieves almost unlimited switching frequencies and switching reliability.

Safe inner configuration

Amongst other things, the internal diagnostics inspections for short circuits, earth short-circuits and line breaks as well as safe overexcitation for releasing the brake and switching to reduced holding voltage when the brake is opened are the components required for “fail-safe” inner configuration.

Numerous safety functions

Numerous safety functions permit comprehensive error diagnostics. The brake voltage is monitored. An excessively high voltage could dangerously extend the drop-out time on switch-off, if, for example, this were to cause a vertical axis to drop to an unpermittedly low level. The monitoring of the switching times, which influence the braking distance, is therefore another component of error diagnostics.

Safe switching condition monitoring

The signal evaluation of the release monitoring with plausibility check permits a switching condition monitoring of the brake. The plausibility is controlled as follows: If voltage is applied, the brake must be opened after a defined time and vice versa. The switching condition monitoring can be used to reliably prevent the drive starting up against a closed brake. In this way, creeping errors, such as gradually increasing wear, which affects the switching times, can be detected.

Product Summary

Safety Clutches/Overload Clutches

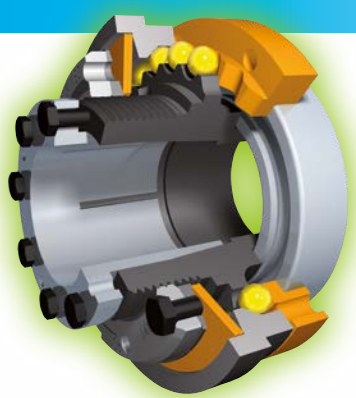

- **EAS®-Compact®/EAS®-NC**
  Positive locking and completely backlash-free torque limiting clutches
- **EAS®-smartic®**
  Cost-effective torque limiting clutches, quick installation
- **EAS®-element clutch/EAS®-elements**
  Load-disconnecting protection against high torques
- **EAS®-axial**
  Exact limitation of tensile and compressive forces
- **EAS®-Sp/EAS®-Sm/EAS®-Zr**
  Load-disconnecting torque limiting clutches with switching function
- **ROBA®-slip hub**
  Load-holding, frictionally locked torque limiting clutches
- **ROBA®-contitorque**
  Magnetic continuous slip clutches
- **EAS®-HSC/EAS®-HSE**
  High-speed safety clutches for high-speed applications

Shaft Couplings

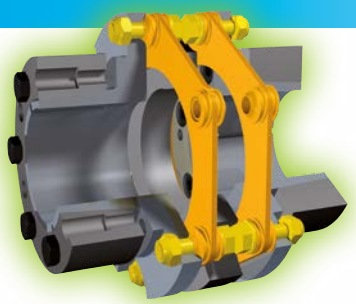

- **smartflex®/primeflex®**
  Perfect precision couplings for servo and stepping motors
- **ROBA®-ES**
  Backlash-free and damping for vibration-sensitive drives
- **ROBA®-DS/ROBA®-D**
  Backlash-free, torsionally rigid all-steel couplings
- **ROBA®-DSM**
  Cost-effective torque-measuring couplings

Electromagnetic Brakes/Clutches

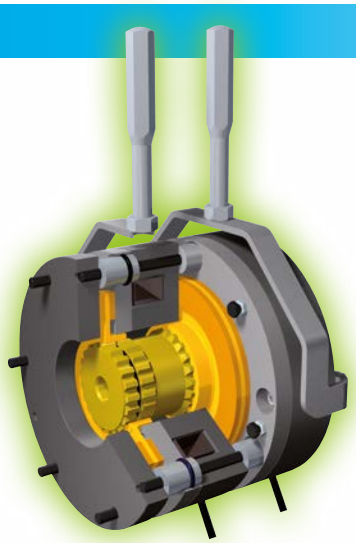

- **ROBA-stop® standard**
  Multifunctional all-round safety brakes
- **ROBA-stop®-M motor brakes**
  Robust, cost-effective motor brakes
- **ROBA-stop®-S**
  Water-proof, robust monoblock brakes
- **ROBA-stop®-Z/ROBA-stop®-silenzio®**
  Doubly safe elevator brakes
- **ROBA®-diskstop®**
  Compact, very quiet disk brakes
- **ROBA®-topstop®**
  Brake systems for gravity loaded axes
- **ROBA®-linearstop**
  Backlash-free brake systems for linear motor axes
- **ROBA®-guidestop**
  Backlash-free holding brake for profield rail guides
- **ROBATIC®/ROBA®-quick/ROBA®-takt**
  Electromagnetic clutches and brakes, clutch brake units

DC Drives

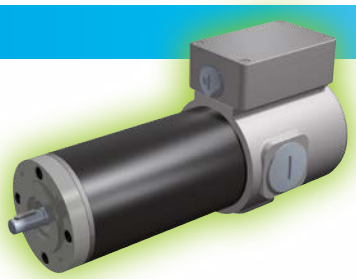

- **tendo®-PM**
  Permanent magnet-excited DC motors

Headquarters

Chr. Mayr GmbH + Co. KG
Eichenstraße 1, D-87665 Mauerstetten
Tel.: +49 83 41/8 04-0, Fax: +49 83 41/80 44 21
www.mayr.com, E-Mail: info@mayr.com

mayr®
your reliable partner

Service Germany

Baden-Württemberg
Esslinger Straße 7
70771 Leinfelden-Echterdingen
Tel.: 07 11/45 96 01 0
Fax: 07 11/45 96 01 10

Bavaria
Eichenstraße 1
87665 Mauerstetten
Tel.: 0 83 41/80 41 04
Fax: 0 83 41/80 44 23

Chemnitz
Bornaer Straße 205
09114 Chemnitz
Tel.: 03 71/4 74 18 96
Fax: 03 71/4 74 18 95

Franken
Unterer Markt 9
91217 Hersbruck
Tel.: 0 91 51/81 48 64
Fax: 0 91 51/81 62 45

Hagen
Im Langenstück 6
58093 Hagen
Tel.: 0 23 31/78 03 0
Fax: 0 23 31/78 03 25

Kamen
Lünener Straße 211
59174 Kamen
Tel.: 0 23 07/23 63 85
Fax: 0 23 07/24 26 74

North
Schiefer Brink 8
32699 Extertal
Tel.: 0 57 54/9 20 77
Fax: 0 57 54/9 20 78

Rhine-Main
Hans-Böckler-Straße 6
64823 Groß-Umstadt
Tel.: 0 60 78/7 82 53 37
Fax: 0 60 78/9 30 08 00

Branch office

China
Mayr Zhangjiagang
Power Transmission Co., Ltd.
Fuxin Road No.7, Yangshe Town
215637 Zhangjiagang
Tel.: 05 12/58 91-75 67
Fax: 05 12/58 91-75 66
info@mayr-ptc.cn

Great Britain
Mayr Transmissions Ltd.
Valley Road, Business Park
Keighley, BD21 4LZ
West Yorkshire
Tel.: 0 15 35/66 39 00
Fax: 0 15 35/66 32 61
sales@mayr.co.uk

France
Mayr France S.A.S.
Z.A.L. du Minopole
Rue Nungesser et Coli
62160 Bully-Les-Mines
Tel.: 03.21.72.91.91
Fax: 03.21.29.71.77
contact@mayr.fr

Italy
Mayr Italia S.r.l.
Viale Veneto, 3
35020 Saonara (PD)
Tel.: 0498/79 10 20
Fax: 0498/79 10 22
info@mayr-italia.it

Singapore
Mayr Transmission (S) PTE Ltd.
No. 8 Boon Lay Way Unit 03-06,
TradeHub 21
Singapore 609964
Tel.: 00 65/65 60 12 30
Fax: 00 65/65 60 10 00
info@mayr.com.sg

Switzerland
Mayr Kupplungen AG
Tobeläckerstraße 11
8212 Neuhausen am Rheinfall
Tel.: 0 52/6 74 08 70
Fax: 0 52/6 74 08 75
info@mayr.ch

USA
Mayr Corporation
10 Industrial Avenue
Mahwah
NJ 07430
Tel.: 2 01/4 45-72 10
Fax: 2 01/4 45-80 19
info@mayrcorp.com

Representatives

Australia
Regal Beloit Australia Pty Ltd.
19 Corporate Ave
03178 Rowville, Victoria
Australien
Tel.: 0 3/92 37 40 00
Fax: 0 3/92 37 40 80
salesAUvic@regalbeloit.com

India
National Engineering
Company (NENCO)
J-225, M.I.D.C.
Bhosari Pune 411026
Tel.: 0 20/27 13 00 29
Fax: 0 20/27 13 02 29
nenco@nenco.org

Japan
MATSUI Corporation
2-4-7 Azabudai
Minato-ku
Tokyo 106-8641
Tel.: 03/35 86-41 41
Fax: 03/32 24 24 10
k.goto@matsui-corp.co.jp

Netherlands
Groneman BV
Amarilstraat 11
7554 TV Hengelo OV
Tel.: 074/2 55 11 40
Fax: 074/2 55 11 09
aandrijftechniek@groneman.nl

Poland
Wamex Sp. z o.o.
ul. Pozaryskiego, 28
04-703 Warszawa
Tel.: 0 22/6 15 90 80
Fax: 0 22/8 15 61 80
wamex@wamex.com.pl

South Korea
Mayr Korea Co. Ltd.
15, Yeondeok-ro 9beon-gil
Seongsan-gu
51571 Changwon-si
Gyeongsangnam-do. Korea
Tel.: 0 55/2 62-40 24
Fax: 0 55/2 62-40 25
info@mayrkorea.com

Taiwan
German Tech Auto Co., Ltd.
No. 28, Fenggong Zhong Road,
Shengang Dist.,
Taichung City 429, Taiwan R.O.C.
Tel.: 04/25 15 05 66
Fax: 04/25 15 24 13
abby@zfgta.com.tw

Czech Republic
BMC - TECH s.r.o.
Hviezdoslavova 29 b
62700 Brno
Tel.: 05/45 22 60 47
Fax: 05/45 22 60 48
info@bmc-tech.cz

More representatives:

Austria, Belgium, Brazil, Canada, Denmark, Finland, Greece, Hongkong, Hungary, Indonesia, Israel, Luxembourg, Malaysia, New Zealand, Norway, Philippines, Romania, Russia, Slovakia, Slovenia, South Africa, Spain, Sweden, Thailand, Turkey

You can find the complete address for the representative responsible for your area under www.mayr.com in the internet.

16/01/2017 GF/SC