TECHNOLOGY GROUP mk®

News Assembly Components

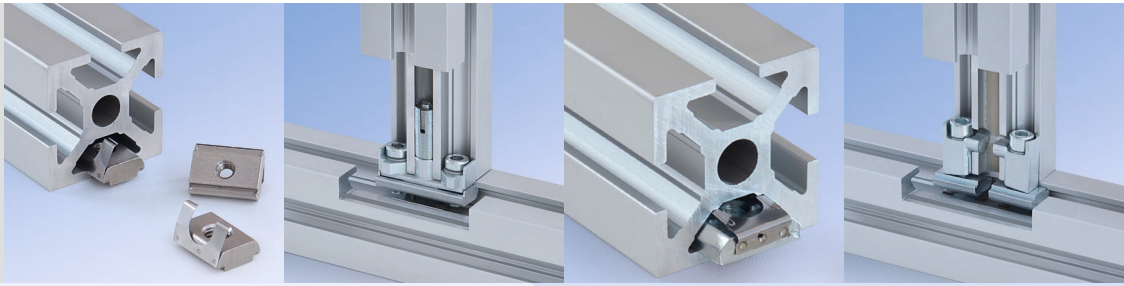

Assembly Components

Anchor fasteners

Screw on and go

The Anchor fastener is a patented, new fastener type that can be used without any profile services. The anchor fastener is inserted into the series 40 ø 10 mm drilled hole and tensioned by means of a screw. The lateral anchors fix the fastener to the other profile, on the one hand, and ensure torsional rigidity, on the other.

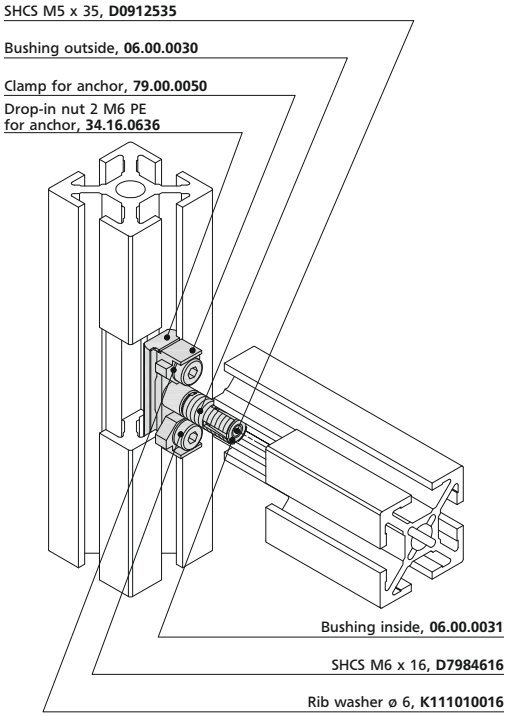

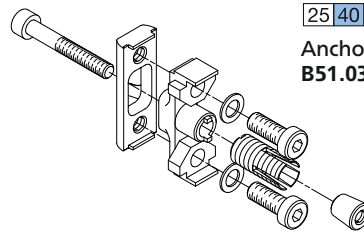

25 | 40 | 50 | 60

Anchor fastener
B51.03.050

Claw clamps

For retrofitting

Claw clamps are a versatile patented connector type for use with profiles of series 40 and 50. They allow for easy tightening of screws in the slots and provide the option of retrofitting; therefore they are suitable for a wide range of applications. They can be inserted into profiles with two, four, eight, or „n“ slots. For this type of connection, standard end machining with a drill hole of ø 10 mm and an edge spacing of 15 mm for series 40 and 14 mm for series 50 is required.

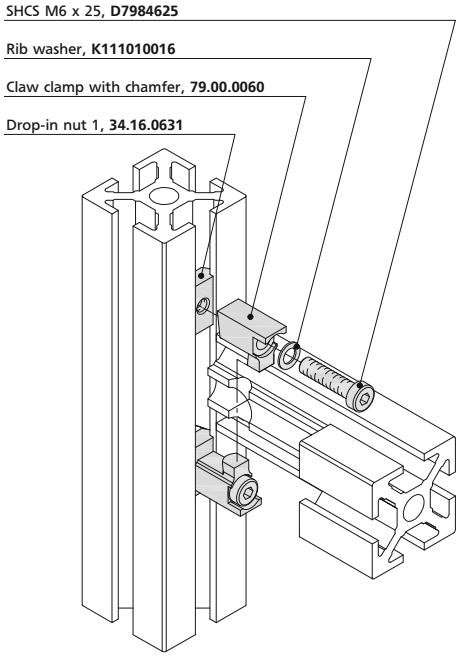

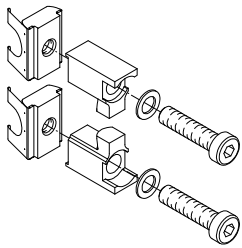

25 | 40 | 50 | 60

Claw clamp
B51.03.060

Series 40

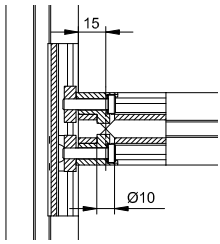

Series 50

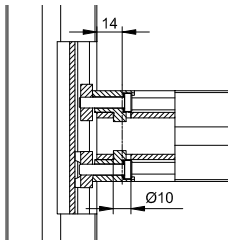

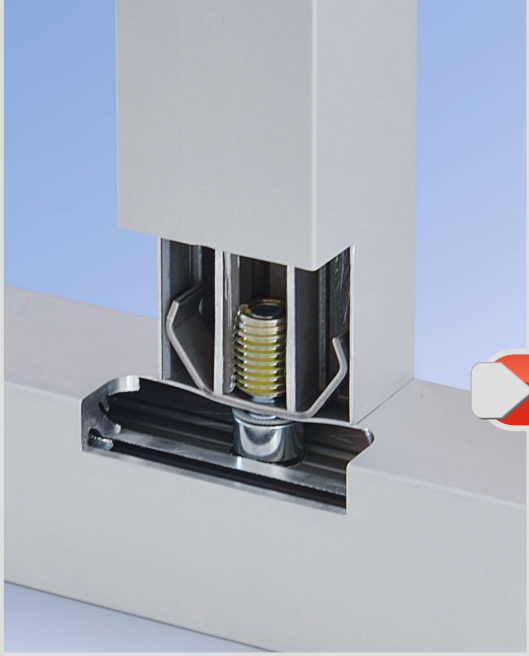

Assembly Components

Cleanroom fasteners

Torsional rigidity for cleanrooms

Cleanroom fasteners are patented connectors by mk, which ensure torsional rigidity in addition to safe connection of series 40 cleanroom profiles. The fastener is clipped into the face side of a profile equipped with a threaded insert. By screw-fastening the profiles with each other, the connector is tensioned in the sealed slot and thus displaces the parting slot in that area. This results in particularly tight form closure.

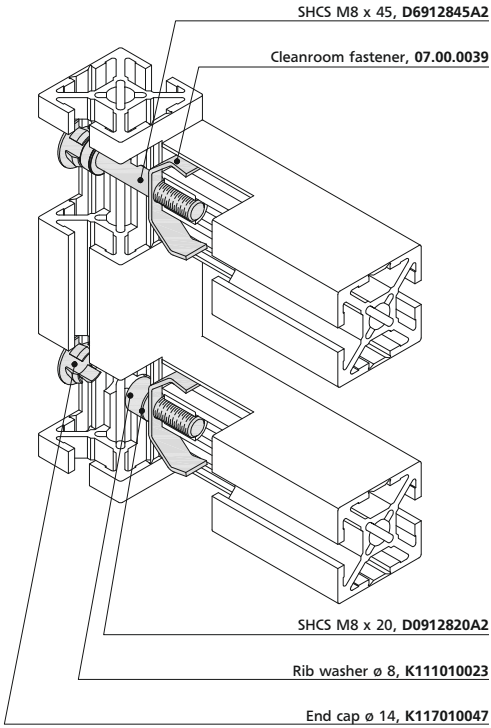

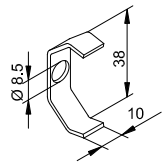

25 | 40 | 50 | 60

Cleanroom fastener,
Stainless steel
07.00.0039
B51.03.100

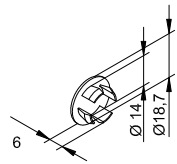

End cap for drilled hole ø 14 mm

gray	**K117010047**
black	**K117010048**
beige	**K117010049**

Instead of a end cap, a drop of adhesive can be used for sealing the drilled hole. The advantage is, that adhesive does not allow for dirt to be traps and thus is perfectly suitable for use e.g. in cleanrooms.

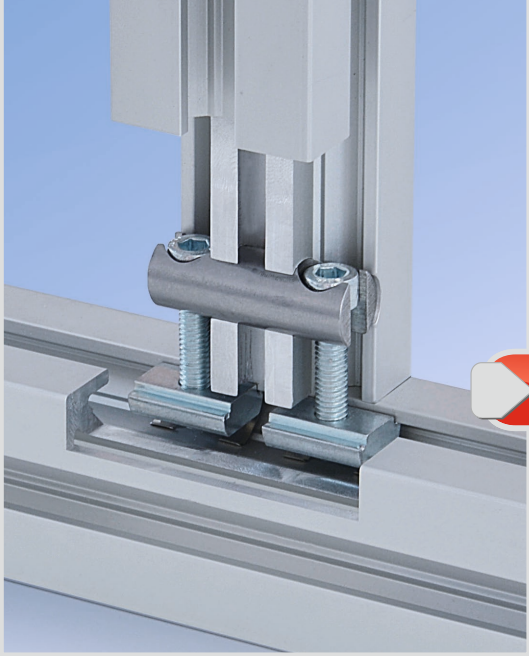

Bolt fasteners

Compact and super strong

Bolt fasteners are compact and very robust connectors. They can be used in situations, where the interference contours of an angle needs to be avoided but without compromising stability of the connection. For the use of bolt fasteners, end machining with ø 14 mm at a distance of 20 mm from the edge is required. Thanks to the large range of variants, the fastener can be used with profile series 40 and 50.

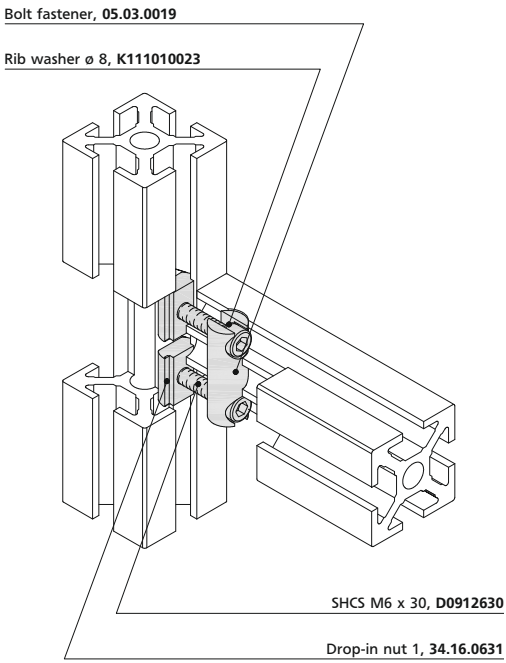

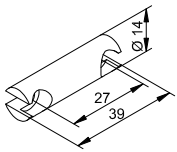

Bolt fastener 40
Steel Zn
05.03.0019
B51.03.070

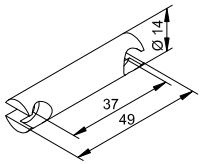

Bolt fastener 50
Steel Zn
05.03.0020
B51.03.073

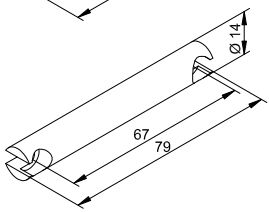

Bolt fastener 80
Steel Zn
05.03.0021
B51.03.071

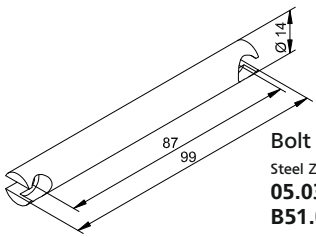

Bolt fastener 100
Steel Zn
05.03.0022
B51.03.074

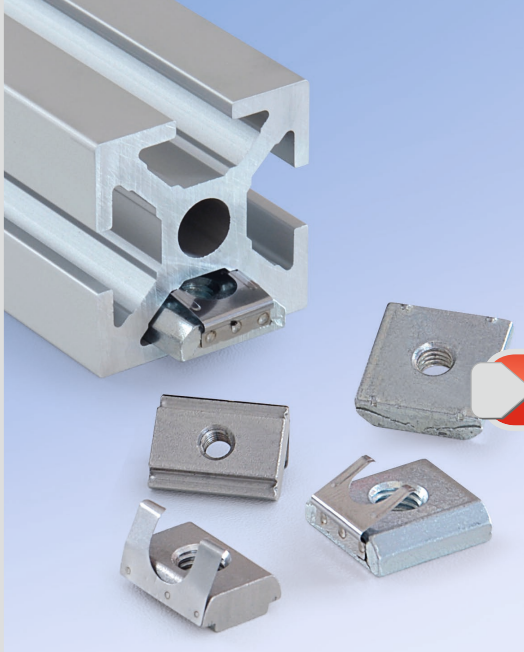

Assembly Components

Nuts with spring steel sheet

Bouncy allrounders

Nuts are the preferred mounting elements at mk in conjunction with angles, consoles, plates and T-slot accessory components. They are heavy-duty and tear-proof. The new variants of nut 1 are equipped with an additional spring steel sheet which fixes the nut in the profile slot and prevents it from sliding. Assembly of attachment elements vertically is much easier. In addition, the ESD variant ensures conductivity of the connection.

Drop-in nuts from mk are intended for later insertion in the profile slot e.g. if the front of the profile is already closed and the nuts 1 can no longer be inserted. The new variants are made of stainless steel and thus are corrosion-resistant.

Installation situation for drop-in nuts

Series 40

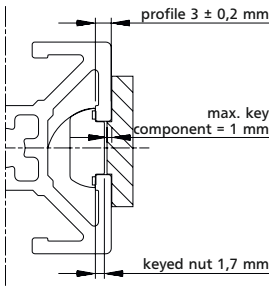

Series 50

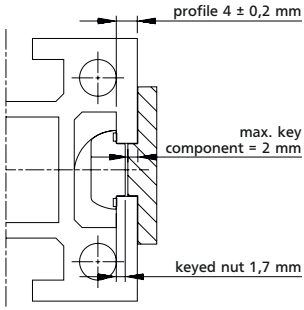

The key height of the component to be fastened, e. g. an angle, must not exceed 1 mm with series 40 or 2 mm for series 50, since otherwise force closure between the profile and the nut is not properly obtained.

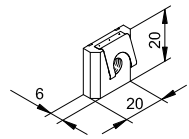

25 | 40 | 50 | 60

Nut 1

Steel Zn,
with spring steel sheet, ESD

M6 **34.02.0050**
M8 **34.01.0050**

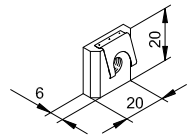

25 | 40 | 50 | 60

Nut 1

Steel Zn,
with spring steel sheet

M6 **34.02.0051**
M8 **34.01.0051**

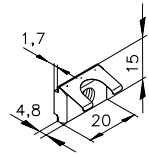

25 | 40 | 50 | 60

Drop-in nut 1

Stainless steel,
with spring steel sheet, ESD

M5 **34.16.0537**
M6 **34.16.0637**
M8 **34.16.0837**

Selection of assembly components

		Angle (one side)	Angle (two sides)	Anchor fasteners	Claw clamps		Bolt fasteners		Cleanroom fasteners	
					Profiles 40 x 40	Profiles 50 x 50	Profiles 40 x 40	Profiles 50 x 50		
F	Force-bearing capacity	1000 N	2000 N	1200 N	1200 N	1200 N	1200 N	1200 N	900 N	900 N
M	Moment of resistance	200 Nm	250 Nm	40 Nm	50 Nm	70 Nm	60 Nm	80 Nm	20 Nm	70 Nm
M_T	Moment of torsional resistance	20 Nm	80 Nm	5 Nm	10 Nm	15 Nm	15 Nm	20 Nm	15 Nm	20 Nm
	End machining	none	none	none	ø 10 mm	ø 10 mm	ø 14 mm	ø 14 mm	Stepped drill hole ø 14/9 mm	Stepped drill hole ø 14/9 mm
	Retrofitting assembly between profiles	yes	yes	no	yes	yes	yes	yes	no	no
	Subsequent shifting	yes	yes	yes	yes	yes	yes	yes	no	no

Screw size	M5	M6	M8
Pre-tension force [N]	6000	9000	16500
Tightening torque [Nm]	6	10	25
Max. operating force in axial direction (static) [N]	1800	2500	4800
Max. operating force in axial direction (dynamic) [N]	900	1500	3400
Friction closure max. [N]	400	630	1100

The specified values are applicable for screws of strength category 8.8 with $\mu = 0.14$. The operating force values apply for centered forces in axial direction. Tightening factors must be separately taken into account.

Other than the maximum values from applicable literature, the maximum values for operating force and friction closure include a safety factor of $s_0 \geq 2$ (for static and oscillating loads). Other safety factors are recommended for changing load directions $s_0 \geq 3$, for dynamic loads $s_0 \geq 4$, and for vibrations and impacts $s_0 \geq 5$.

Maschinenbau Kitz GmbH
Headquarters of the
mk Technology Group

Glockenstraße 84
53844 Troisdorf
Germany

Phone +49 228 4598-0
Fax +49 228 453145

www.mk-group.com
info@mk-group.com