| Uniclass | EPIC |
| --- | --- |
| L441:P41:N544 | D5:X412 |
| CI/SfB | |
| (90.3) \| Xh2 \| (U47) | |

# alexandra

## Mesh Fence Systems

### Protek Systems

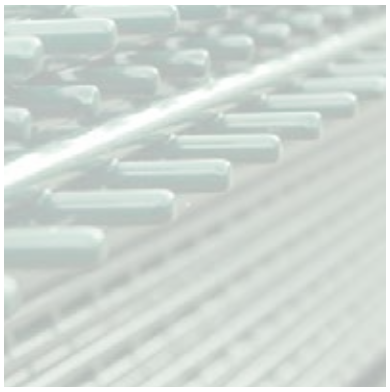

01892 833001

www.alexandrasecurity.com

# How to Find Us

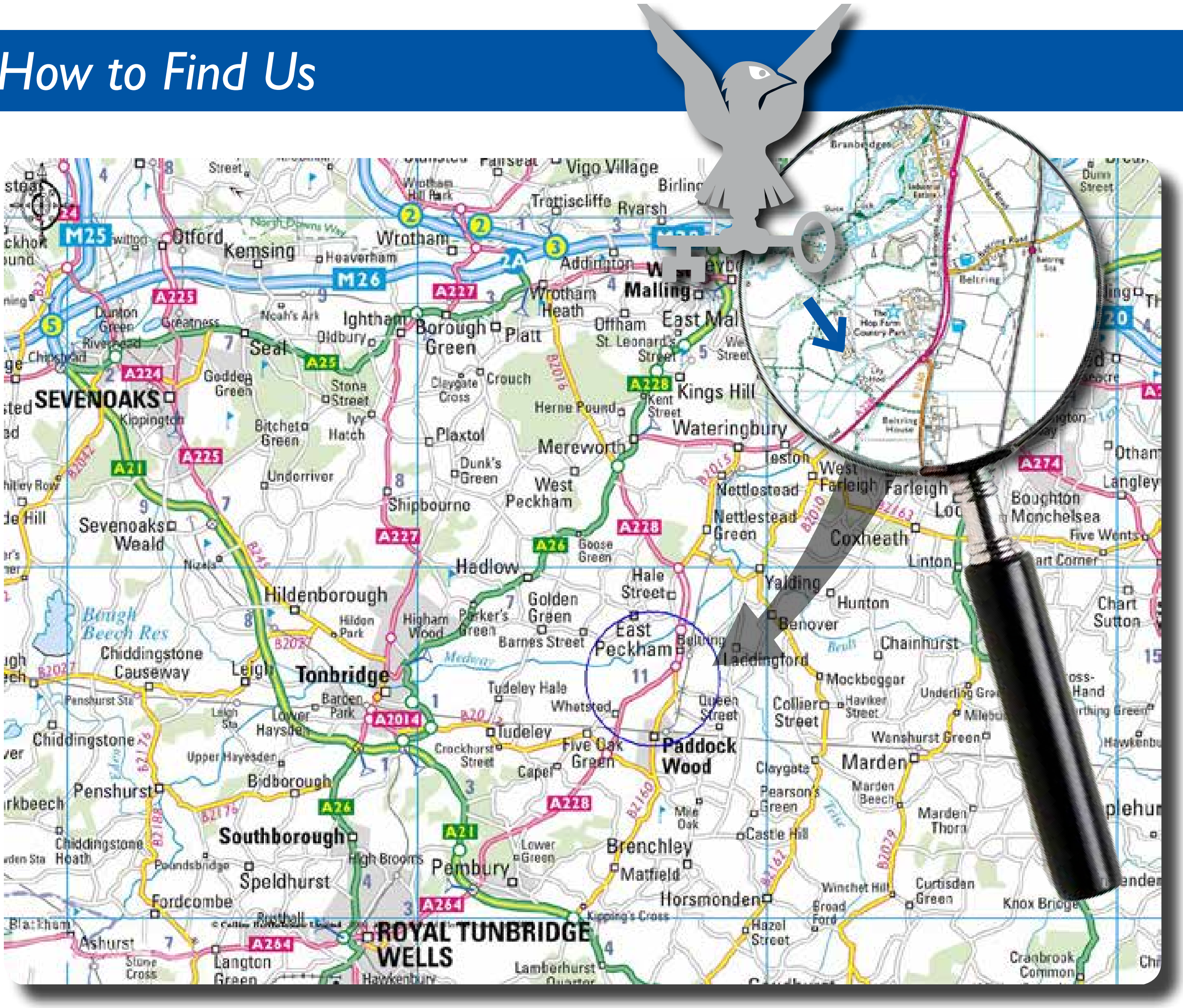


# Customer Service

*"Helping you make the right choice"*

## *Sales Rep Appointment Service!*

*At Alexandra Security Products we offer a sales rep appointment service to assist you in any area of the security market.*

*To arrange a visit please call:*

*01892 833001*

*Mission Statement:-*

*"To provide high quality products together with service, product Knowledge and investment in people."*

alexandra
Mesh Fence Systems

*Alexandra Security Products is a long-established family-run business which commenced trading in 1986. Over the years we have built up a firm reputation for fast, efficient supply to the security market and trade in full accordance with BS EN ISO9001:2000. We can offer full technical assistance for every application.*

*With ongoing constant research into the security market, the Protek mesh fence systems have been developed, offering a comprehensive range to suit almost every application. With so much to offer we have provided you the Protek Specifier's manual to educate you with the full benefits of these systems.*

*We hold high levels of stock on most of the mesh range. In a market where lead times are paramount this helps to give our customers an advantage over the competition.*
*On all stock items we offer a delivery service to any given site within three working days.*
*We guarantee a high level of personal service, from quotation right through to delivery.*

*Our hours of business are 7.00am to 4.30pm Monday to Friday, giving our customers the chance to get ahead of the rush.*

ISO 9001 : 2000 REGISTERED FIRM

OHSAS 18001 REGISTERED FIRM

CHAS

## Payments

*Account customers payment terms are 30 days credit following month of invoice. Non-account customers are subject to a pro-forma invoice. Pro-forma invoice can be paid by the following methods; cheque or BACS, which takes three days to clear, CHAPS payment which clears immediately, however your bank will submit a small charge for this service, or card payment, we accept most cards.*

**NB: Pro-forma goods cannot be manufactured or dispatched until funds are cleared to Alexandra Security Products.**


*Alexandra Security Products*
Unit 1 Perimeter Works, Whetsted Road
Five Oak Green, Tonbridge, TN12 6PZ
Telephone: 01892 833001
Facsimile: 01892 838083
Email: sales@alexandrasecurity.com
www.alexandrasecurity.com

# Contents

alexandra Mesh Fence Systems


## Protek 1000 6 - 7

Application: General purpose boundary fencing
Mesh Size: 200 x 55mm
Security Rating: Medium

## Protek 2000 8 - 9

Application: Schools, Public buildings, Retail Parks and Industrial Premises
Mesh Size: 200 x 55mm
Security Rating: Medium

## Protek 3000 10 - 11

Application: Schools, Commercial premises
Mesh Size: 165 x 38mm
Security Rating: Medium/High

## Protek Twinwire 656 12 - 13

## Protek Twinwire 868 14 - 15

Application: Ballcourts and Playgrounds
Mesh Size: 200 x 50mm
Security Rating: Medium/High

# Contents

alexandra
Mesh Fence Systems


## Protek Rebound 16 - 17

Application: Multi-use games areas
Mesh Size: 66.6 x 50mm/200 x 50mm
Security Rating: Medium/High

## Protek 358 18 - 19

Application: Police stations, MOD, Secure units
Mesh Size: 12.5 x 76.2mm
Security Rating: High

## Protek Gates 20 - 21

The security mesh gates that Alexandra Security Products manufacture are complimentary to the range of mesh shown. Used in multiple applications.

## Specification Clauses 22 - 23

To be read with Preliminaries/General conditions

# Protek 1000

## Protek 1000 - Profiled Mesh Panel System

*The Protek 1000 mesh fence system provides a 'light duty' security fence that is aesthetically pleasing to the eye with high through-visibility, helping it to blend into its surrounding. Protek is a welded mesh panel with horizontal triangular folds that help to form a strong, rigid fence line, particularly suitable for use as a general purpose boundary fence.*

## Posts, Clips and Fixings

*The post that Alexandra Security Products offers along with the clips provides a fixing system allowing for variations whilst securing the panels. The system is easy to install and allows the panels to be stepped, helping the fence line to follow the contours of the ground. With the vandal resistant security fixings this post and clip system provides a reasonable level of security to any boundary.*

## Finish

*Panels and posts having been submitted to a number of pre-coat processes, can be polyester powder coated to BS EN 13438. All fixings are fully galvanised.*

## Suitable For:

- Schools and Colleges
- Public Buildings
- Retail Parks
- Business Parks

# Profiled Mesh

# Technical

## Typical Construction for Protek 1000

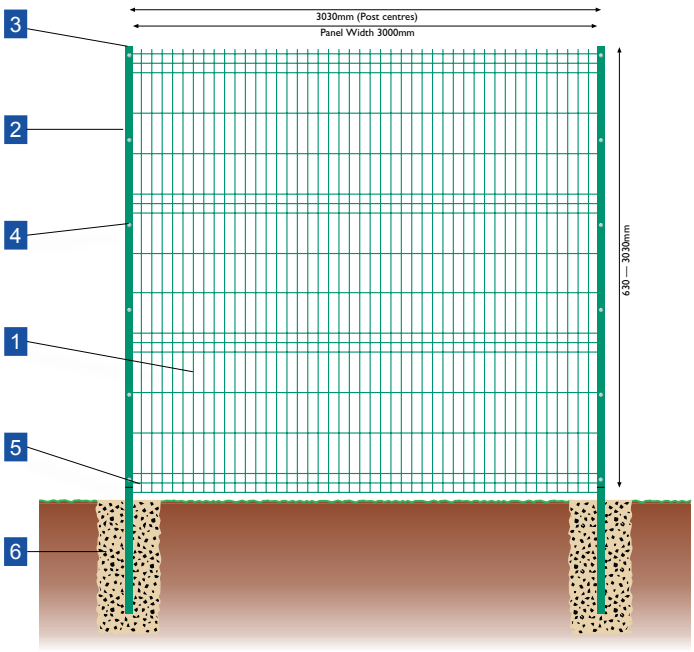


## Construction Table Key

1. Mesh panel - mesh size 200 x 55mm - 5mm wire
2. Post size varies with height (see table)
3. Plastic cap - 60 x 60mm
4. M6 x 30 stainless steel pin hex dome head security screw
5. Triangular folds - 2, 3, 4 or 5 per panel (depending on height)
6. Concrete foundation
7. Durable Plastic Clip

| Nominal Fence Height (m) | Panel Size Height x Width (m) | No. 'V'Bars per Panel | Overall Length of Post (mm) | Post Size (mm) | Number of clips | |
|---|---|---|---|---|---|---|
| | | | | | per Post | per Corner |
| 1.2 (1.3) | 1230 x 3000 | 2 | 1700 | 60 x 60 | 3 | 6 |
| 1.5 (1.6) | 1530 x 3000 | 3 | 2000 | 60 x 60 | 4 | 8 |
| 1.8 | 1730 x 3000 | 3 | 2300 | 60 x 60 | 4 | 8 |
| 2.0 | 1930 x 3000 | 3 | 2600 | 60 x 60 | 4 | 8 |
| 2.4 | 2330 x 3000 | 4 | 3150 | 60 x 60 | 5 | 10 |
| 3.0 | 2930 x 2445 | 5 | 3900 | 80 x 80 | 6 | 12 |

## Side Elevation

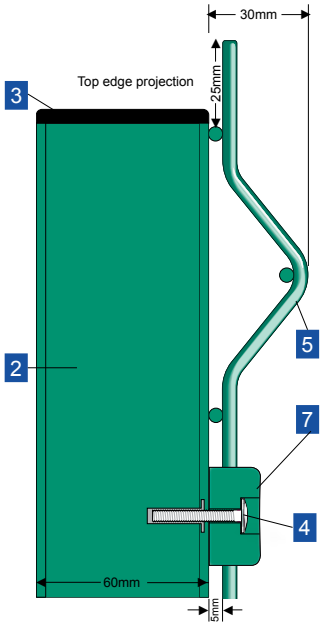


## Plan View

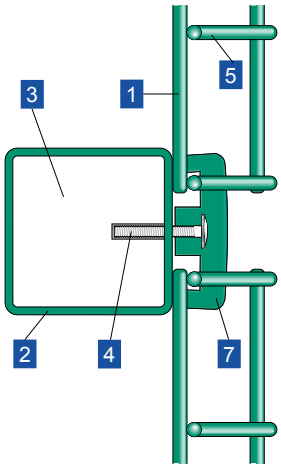


## Post Configurations

Intermediate Post

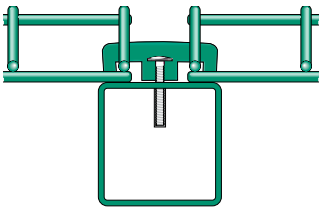

End Post

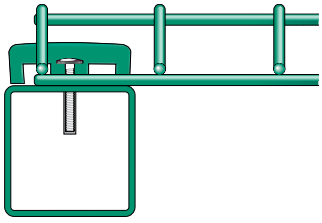

External Corner Post

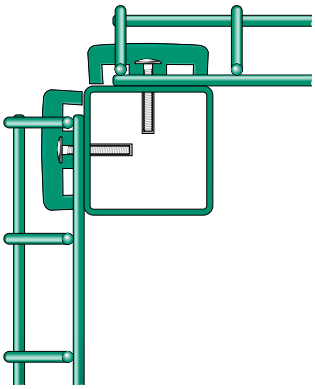

Internal Corner Post

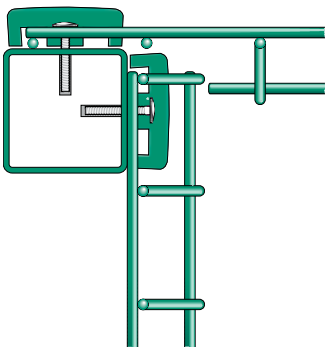

Please note:
The ends of the triangular folds on one of the mesh panels have to be notched (see drawing)

Subject to change Specification clauses on page 18

# Protek 2000

alexandra Mesh Fence Systems

## Protek 2000 - Profiled Mesh Panel System

*The Protek 2000 mesh fence system provides a 'medium level' of security fence that is both aesthetically pleasing to the eye with high through-visibility, helping it to blend into its surrounding. Protek 2000 is a welded mesh panel with horizontal triangular folds that help to form a strong, rigid fence line, particularly suitable for use around schools, public buildings, retail parks and business premises.*

## Posts, Clamp Bars and Fixings

*The post that Alexandra Security Products offers along with the full length clamp bar provides a fixing system allowing for variations whilst securing the panels. The system is easy to install and allows the panels to be stepped, helping the fence line to follow the contours of the ground. With the vandal resistant security fixings this post and clamp system provides a much higher level of security than the traditional clip system.*

## Finish

*Panels, posts and clamp bars having been submitted to a number of pre-coat processes, can be polyester powder coated to BS EN 13438. All fixings are fully galvanised.*

## Suitable For:

- Public Areas
- Retail Parks
- Perimeter Protection
- Industrial Estates

# Profiled Mesh

# Technical

## Typical Construction for Protek 2000

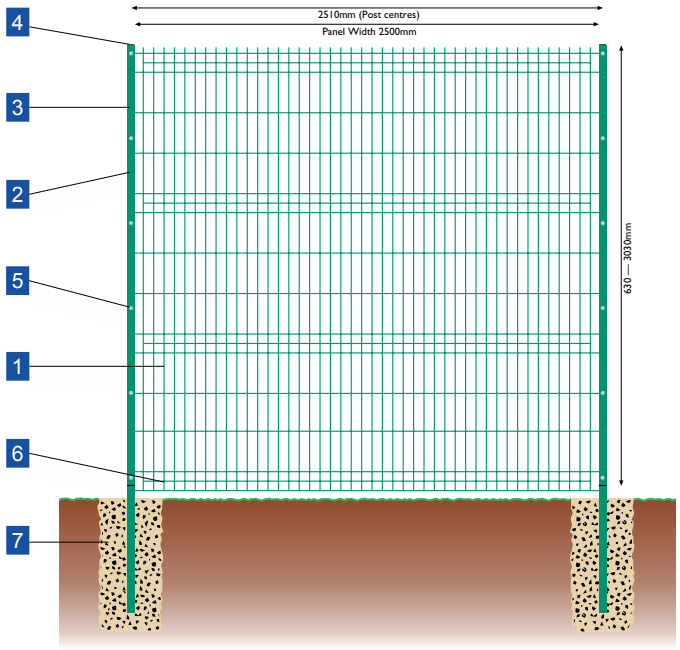


## Construction Table Key

1. Mesh panel - mesh size 200 x 55mm - 5mm wire
2. Post - 60 x 40 x 2mm RHS
3. Clamp bar 41 x 21mm channel (full length of mesh panel)
4. Plastic cap - 60 x 40mm
5. M8 x 100 Cup square security bolt, M8 shear nut, M8 washer
6. Triangular folds - 2, 3 or 4 per panel (depending on height)
7. Concrete foundation

| Nominal Fence Height (m) | Panel Size Height x Width (m) | No. 'V'Bars per Panel | Overall Length of Post (mm) | Number of Fixings | |
|---|---|---|---|---|---|
| | | | | Ends/Inters (1 Clamp) | Corners (2 Clamps) |
| 1.0 (1.1) | 1030 x 2500 | 2 | 1500 | 3 | 6 |
| 1.2 (1.3) | 1230 x 2500 | 2 | 1800 | 3 | 6 |
| 1.5 (1.6) | 1530 x 2500 | 3 | 2100 | 4 | 8 |
| 1.8 | 1730 x 2500 | 3 | 2400 | 4 | 8 |
| 2.0 | 1930 x 2500 | 3 | 2600 | 4 | 8 |
| 2.4 | 2330 x 2500 | 4 | 3000 | 5 | 10 |
| 3.0 | 2930 x 2445 | 5 | 3900 | 6 | 12 |

## Side Elevation

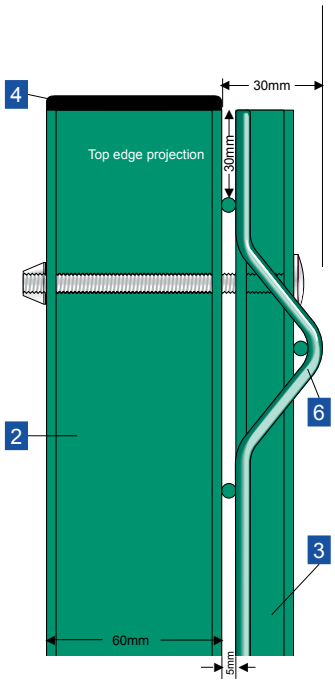


## Plan View

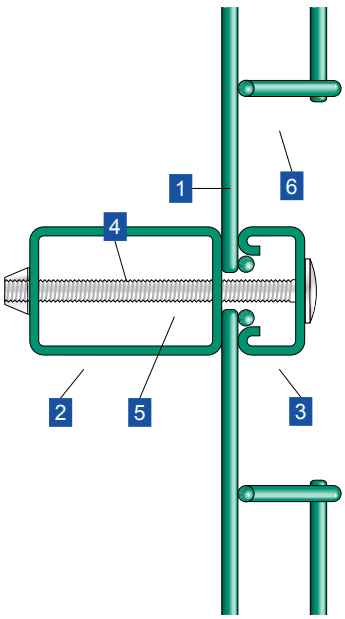


## Post Configurations

Intermediate Post

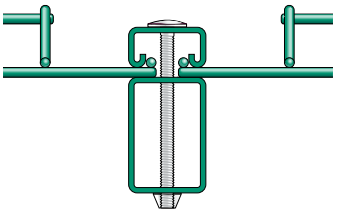

End Post

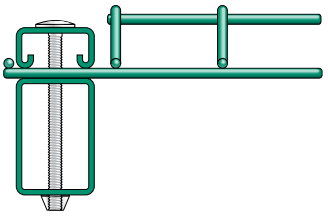

External Corner Post

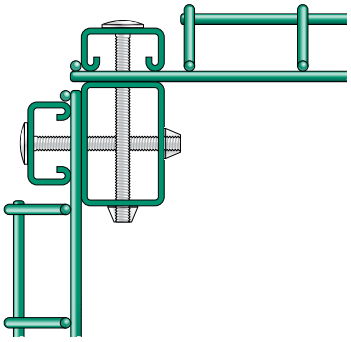

Internal Corner Post

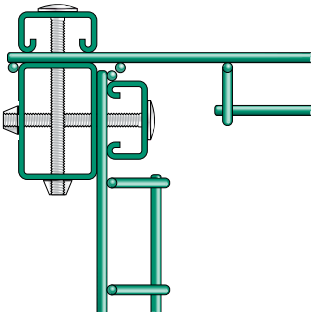

Subject to change

# Protek 3000

alexandra Mesh Fence Systems

## Protek 3000 - Profiled Mesh Panel System

*The Protek 3000 mesh fence system offers a 'higher level' of security than the Protek 2000 mesh fence system, with closer wire centres, giving it greater strength and making it more difficult to climb. Whilst retaining a high level of visibility and an aesthetically pleasing appearance, this system is suitable for use around public buildings, schools and business premises and is also recommended by the planning authorities.*

## Suitable For:

- Schools and Colleges
- Public Buildings
- Retail Parks
- Business Parks

## Posts, Clamp Bars and Fixings

*The post that Alexandra Security Products offers along with the full length clamp bar provides a fixing system allowing for variations whilst securing the panels. The system is easy to install and allows the panels to be stepped, helping the fence line to follow the contours of the ground. With the vandal resistant security fixings this post and clamp system provides a much higher level of security than the traditional clip system.*

## Finish

*Panels, posts and clamp bars having been submitted to a number of pre-coat processes, can be polyester powder coated to BS EN 13438. All fixings are fully galvanised.*

# Profiled Mesh

# Technical

## Typical Construction for Protek 3000

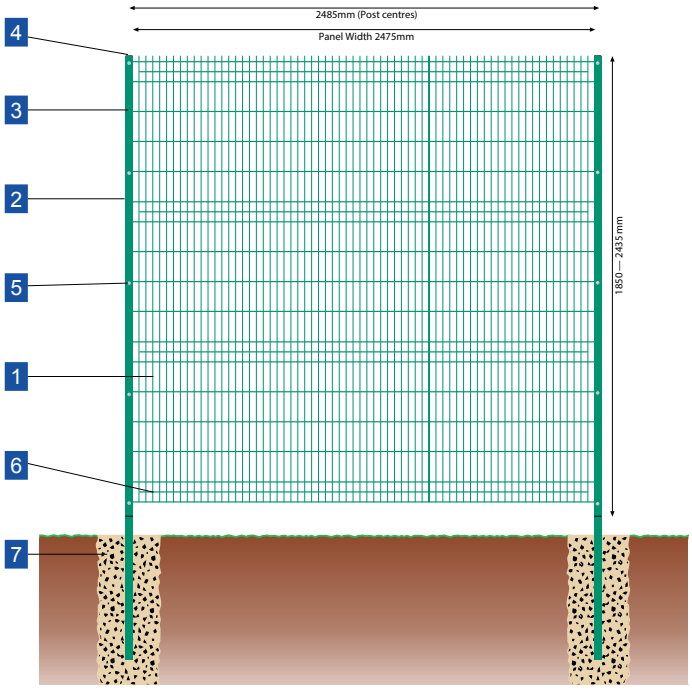


## Construction Table Key

1. Mesh panel - mesh size 165 x 38mm - 5mm wire
2. Post - 60 x 40 x 2mm RHS
3. Clamp bar 41 x 21mm channel (full length of mesh panel)
4. Plastic cap - 60 x 40mm
5. M8 x 100 Cup square security bolt, M8 shear nut, M8 washer
6. Triangular folds - 4 per panel.
7. Concrete foundation

| Nominal Fence Height (m) | Panel Size Height x Width (m) | No. 'V'Bars per Panel | Overall Length of Post (mm) | Number of Fixings | |
|---|---|---|---|---|---|
| | | | | Ends/Inters (1 Clamp) | Corners (2 Clamps) |
| 2.0 | 2040 x 2475 | 4 | 2800 | 5 | 10 |
| 2.4 | 2420 x 2475 | 4 | 3200 | 6 | 12 |

Subject to change

## Side Elevation

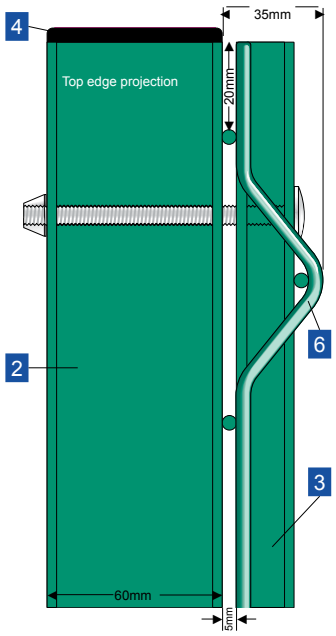


## Plan View

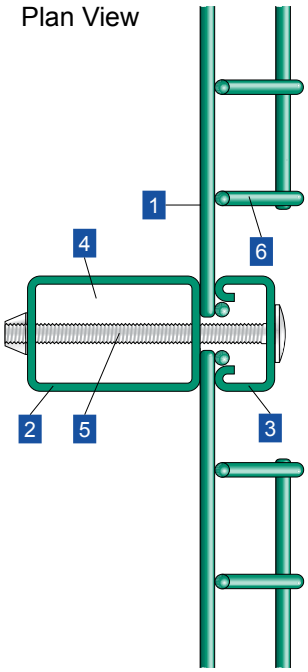


## Post Configurations

Intermediate Post

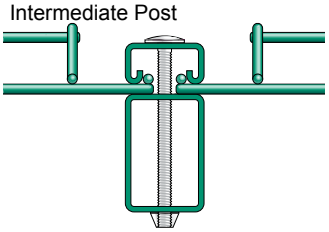

End Post

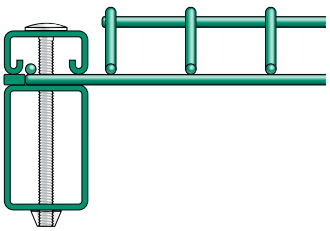

External Corner Post

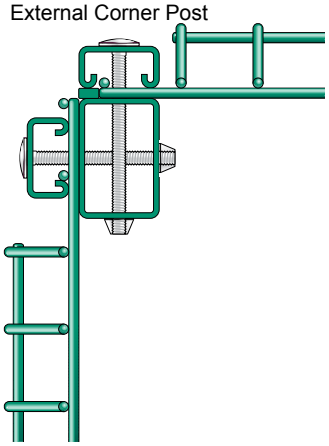

Internal Corner Post

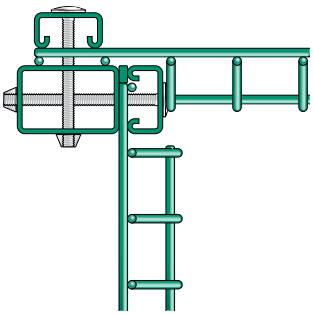

# Protek Twinwire 656

alexandra
Mesh Fence Systems

## Protek Twinwire 656 - Double Wire Panel System

*The Protek Twinwire mesh fence system provides a very versatile mesh fence system that is stronger than the Protek 2000/3000. This system offers a number of different applications including industrial estates, retail parks, industrial buildings, playgrounds and is also particularly suitable for use around sport enclosures.*

## Posts, Clips and Fixings

*The post that Alexandra Security Products offers with the Protek Twinwire system along with a fixing system allowing for variations whilst securing the panels. The system is easy to install and allows the panels to be stepped, helping the fence line to follow the contours of the ground. With the vandal resistant security fixings this post and clip system provides a reasonable level of security to any boundary.*

## Finish

*Panels and posts have been submitted to a number of pre-coat processes, and can be polyester powder coated to BS EN 13438. All fixings are fully galvanised.*

## Suitable For:

- Schools and Colleges
- Public Buildings
- Retail Parks
- Business Parks

# Flat Panel System

# Technical

## Typical Construction for Protek Twinwire 656

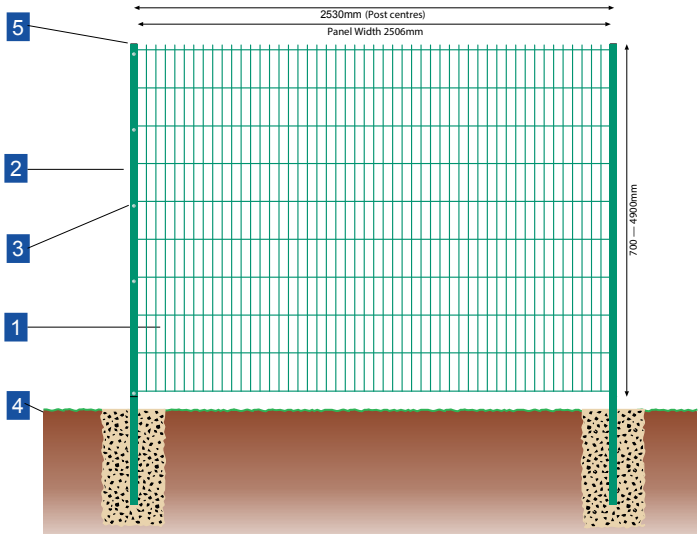


### Construction Table Key

1 Mesh panel - mesh size 200 x 50mm - 1 x 5mm vertical and 2 x 6mm horizontal wire

2 Post Sizes - 60 x 60mm

3 M6 x 30 Stainless steel pin hex dome head security screw with durable plastic clip

4 Concrete foundation

5 60 x 60 Post cap

| Nominal Fence Height (m) | Panel Size Height x Width (m) | Post Size (mm) | Overall Length of Post (mm) | Number of Fixings | |
|---|---|---|---|---|---|
| | | | | Ends/Inters | Corners |
| 1.8 | 1830 x 2506 | 60 x 60 | 2400 | 5 | 10 |
| 2.0 | 2030 x 2506 | 60 x 60 | 2600 | 6 | 12 |
| 2.4 | 2430 x 2506 | 60 x 60 | 3200 | 7 | 14 |

## Side Elevation

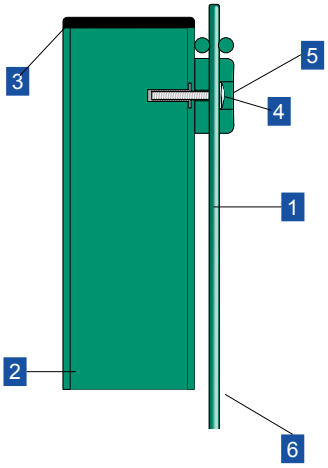


## Plan View

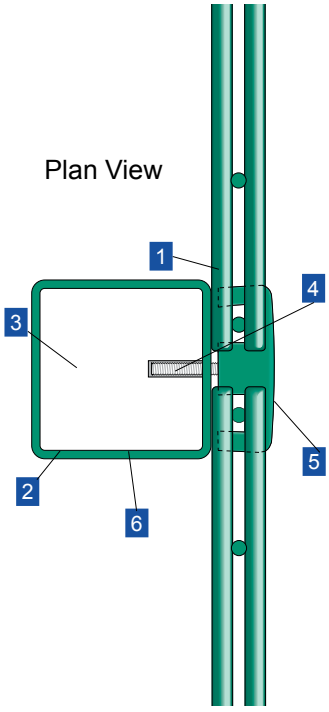


## Post Configurations

Intermediate Post

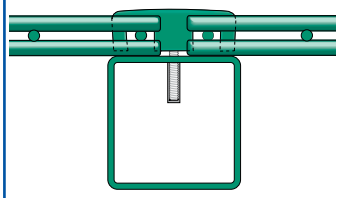

End Post

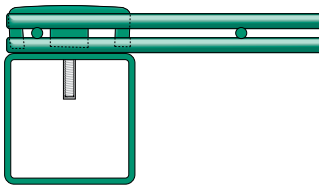

External Corner Post

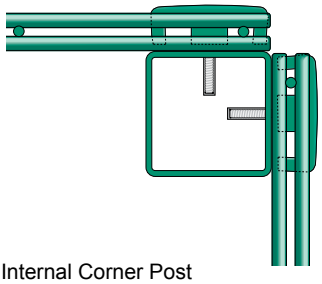

Internal Corner Post

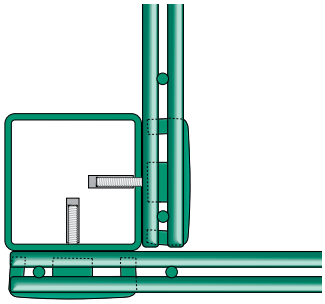

# Protek Twinwire 868

alexandra
Mesh Fence Systems

## Protek Twinwire 868 - Double Wire Panel System

*The Protek Twinwire mesh fence system provides a very versatile mesh fence system that is stronger than the Protek 2000/3000. This system offers a number of different applications including industrial estates, retail parks, industrial buildings, playgrounds and is also particularly suitable for use around sport enclosures.*

## Posts, Clamp Bars and Fixings

*The post that Alexandra Security Products offers with the Protek Twinwire system along with the full length clamp bar provides a fixing system allowing for variations whilst securing the panels. The system is easy to install and allows the panels to be stepped, helping the fence line to follow the contours of the ground. By using the full length clamp bar, the edge of the mesh panel is protected, unlike other traditional clip systems.*

## Finish

*Panels, posts and clamp bars having been submitted to a number of pre-coat processes, can be polyester powder coated to BS EN 13438. All fixings are fully galvanised.*

## Suitable For:

- Ball Parks
- Sports Facilities
- Retail Parks
- Business Parks

# Flat Panel System

# Technical

## Typical Construction for Protek Twinwire 868

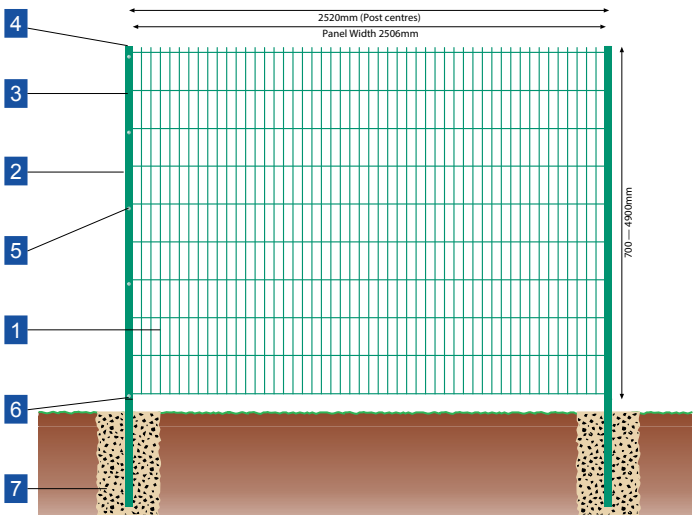


### Construction Table Key

1. Mesh panel - mesh size 200 x 50mm - 1 x 6mm vertical and 2 x 8mm horizontal wire
2. Post size varies with height (see table)
3. Clamp bar 40 x 5 x 6mm flat bar (full length of mesh panel)
4. Plastic cap varies with post size (see table)
5. M8 x 40 Stainless steel pin hex dome head security screw
6. Clip - 45mm wide x 20mm deep
7. Concrete foundation

| Nominal Fence Height (m) | Panel Size Height x Width (m) | Post Size (mm) | Overall Length of Post (mm) | Number of Fixings | |
|---|---|---|---|---|---|
| | | | | Ends/Inters (1 Clamp) | Corners (2 Clamps) |
| 1.0 | 1030 x 2506 | 60 x 40 | 1500 | 4 | 8 |
| 1.2 | 1230 x 2506 | 60 x 40 | 1800 | 4 | 8 |
| 1.8 | 1830 x 2506 | 60 x 40 | 2400 | 8 | 16 |
| 2.0 | 2030 x 2506 | 60 x 40 | 2600 | 9 | 18 |
| 2.4 | 2330 x 2506 | 60 x 40 | 3200 | 10 | 20 |
| 2.9* | 2860 x 2506 | 80 x 40 | 3800 | 13 | 26 |
| 3.1* | 3060 x 2506 | 80 x 40 | 4000 | 13 | 26 |
| 3.5* | 3470 x 2506 | 80 x 40 | 4500 | Contact us for more details. | |
| 3.7* | 3660 x 2506 | 80 x 40 | 4700 | | |
| 3.9* | 3860 x 2506 | 80 x 40 | 4900 | | |
| 4.1* | 4060 x 2506 | 100 x 60 | 5100 | | |
| 4.5* | 4470 x 2506 | 120 x 60 | 5500 | | |
| 4.9* | 4880 x 2506 | 120 x 60 | 6000 | | |

* Made up of two panels. Depending on height or specification  Subject to change

## Side Elevation

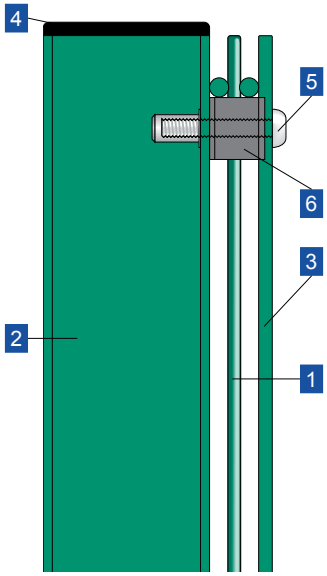


## Plan View

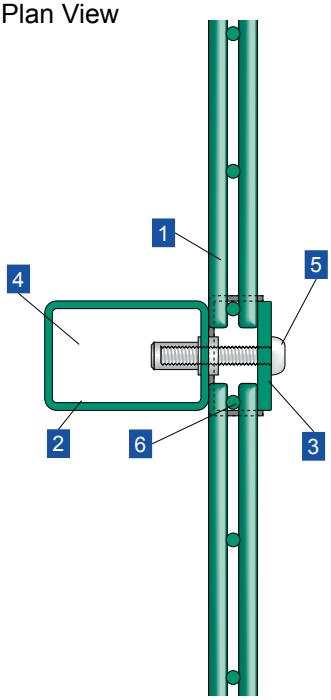


## Post Configurations

Intermediate Post

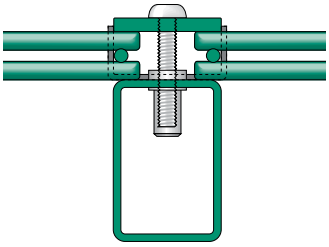

End Post

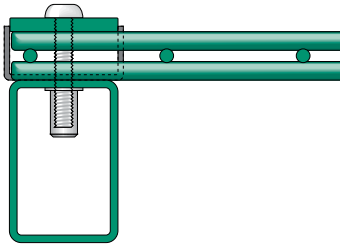

External Corner Post

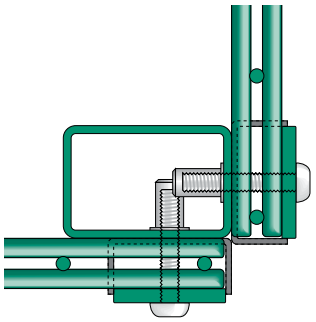

Internal Corner Post

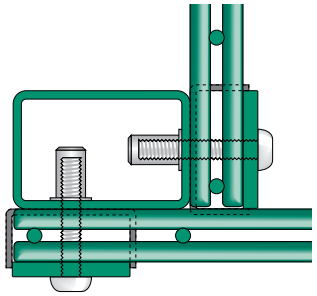

# Protek Rebound

alexandra
Mesh Fence Systems

## Protek Rebound - Double Wire Rebound System

*The Protek Rebound mesh fence system has been designed for use around multi-use ball game areas. The Protek Rebound Panel is 2.0m high with the wire spacing on the lower 1200mm of the panel being 66.6 x 50mm and the remaining 800mm above being 200 x 50mm. The closer wire centres on the lower part of the panel give it high rebound properties, helping the ball to rebound back into the court.*

## Posts, Clamp Bars and Fixings

*The post that Alexandra Security Products offers with the Protek Rebound system along with the full length clamp bar provides a fixing system allowing for variations whilst securing the panels. The system is easy to install and allows the panels to be stepped, helping the fence line to follow the contours of the ground. By using the full length clamp bar, the edge of the mesh panel is protected.*

## Finish

*Panels, posts and clamp bars having been submitted to a number of pre-coat processes, can be polyester powder coated to BS EN 13438. All fixings are fully galvanised.*

# Flat Panel System

# Technical

## Typical Construction for Protek Rebound

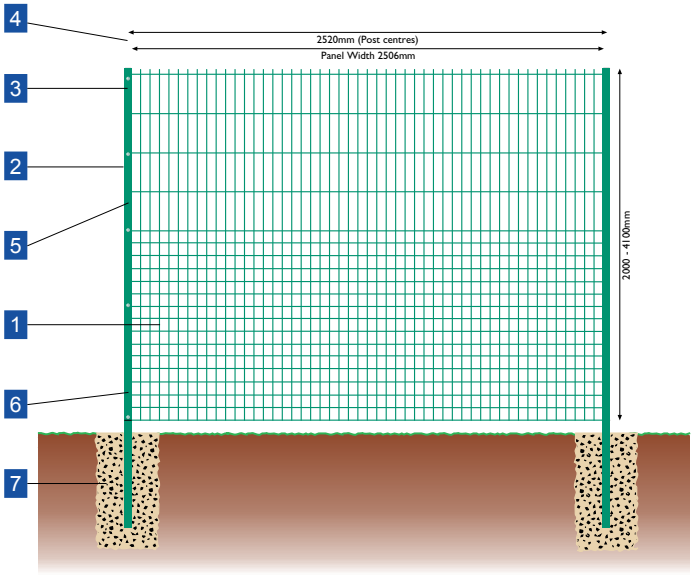


## Construction Table Key

1. Mesh panel - mesh size 66.6 x 50mm up to 1200mm high then wire spacing at 200 x 50mm - 1 x 6mm vertical and 2 x 8mm horizontal wire
2. Post size varies with height (see table)
3. Clamp bar 40 x 5mm flat bar (full length of mesh panel)
4. Plastic cap varies with post size (see table)
5. M8 x 40 Stainless steel pin hex dome head security screw
6. Concrete foundation

| Nominal Fence Height | Panel Size Height x Width (mm) | Post Size (mm) Ends/Inters | Post Size (mm) Corners | Overall Length Of Post | Number of Fixings | |
|---|---|---|---|---|---|---|
| | | | | | Ends/Inters (1 Clamp) | Corners (2 Clamps) |
| 2.0 | 2030 x 2506 | 60 x 40 | 60 x 40 | 2700 | 9 | 18 |
| 3.1* | 3060 x 2506 | 80 x 40 | 80 x 40 | 3900 | 13 | 26 |
| 4.1* | 4060 x 2506 | 100 x 50 | 100 x 50 | 4950 | 18 | 36 |

* Made up of two panels: 3.1m = 1030+2030  4.1m = 2030+2030  Subject to change

## Side Elevation

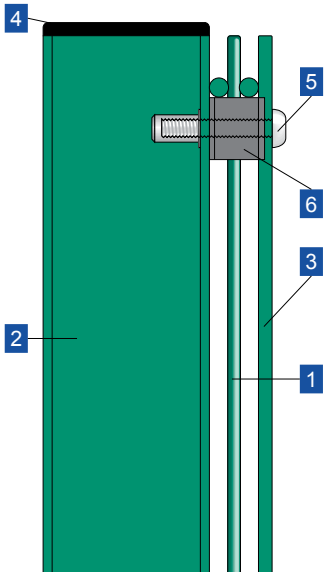


## Plan View

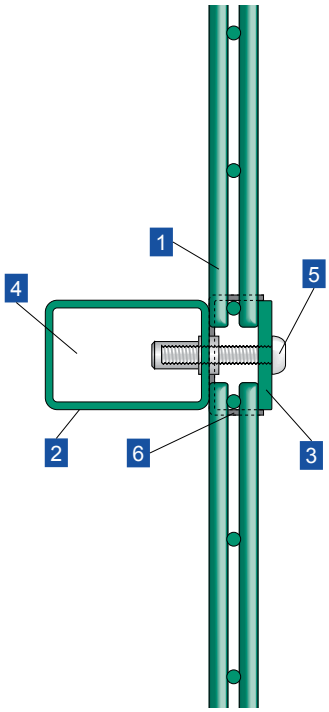


## Post Configurations

Intermediate Post

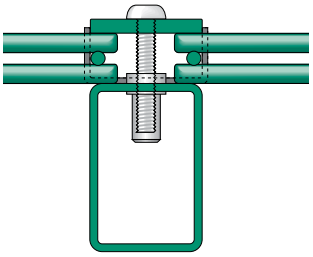

End Post

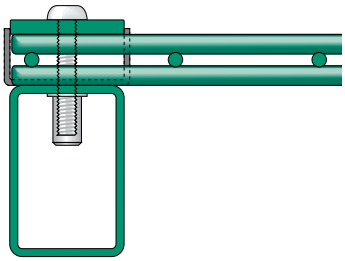

External Corner Post

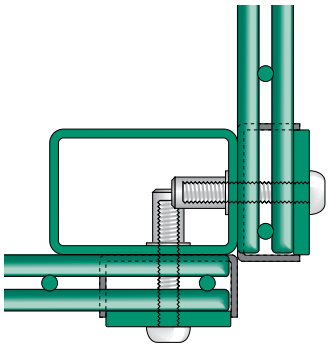

Internal Corner Post

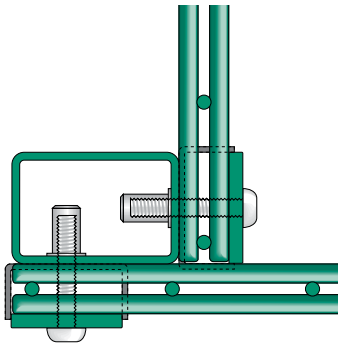

# Protek 358

alexandra
Mesh Fence Systems

## Protek 358

*The Protek 358 Prison mesh flat panel system is designed to provide a very high level of security that is almost impossible to climb, with the narrow apertures of the mesh preventing any intruder gaining a foothold, whilst retaining a high level of visibility and an aesthetically pleasing appearance. This system is used extensively by the Ministry of Defence around high security sites.*

## Posts, Clamp Bars and Fixings

*The post that Alexandra Security Products offers with the Protek 358 system along with the full length clamp bar provides a fixing system allowing for variations whilst securing the panels. The system is easy to install and allows the panels to be stepped, helping the fence line to follow the contours of the ground. With the vandal resistant security fixings this post and clamp system provides a very high level of security.*

## Finish

*Panels, posts and clamp bars having been submitted to a number of pre-coat processes, an be polyester powder coated to BS EN 13438. All fixings are fully galvanised.*

## Suitable For:

- High Security Facilities
- MoD property
- Industrial Estates
- Prisons

# Flat Panel System

# Technical

## Typical Construction for Protek 358

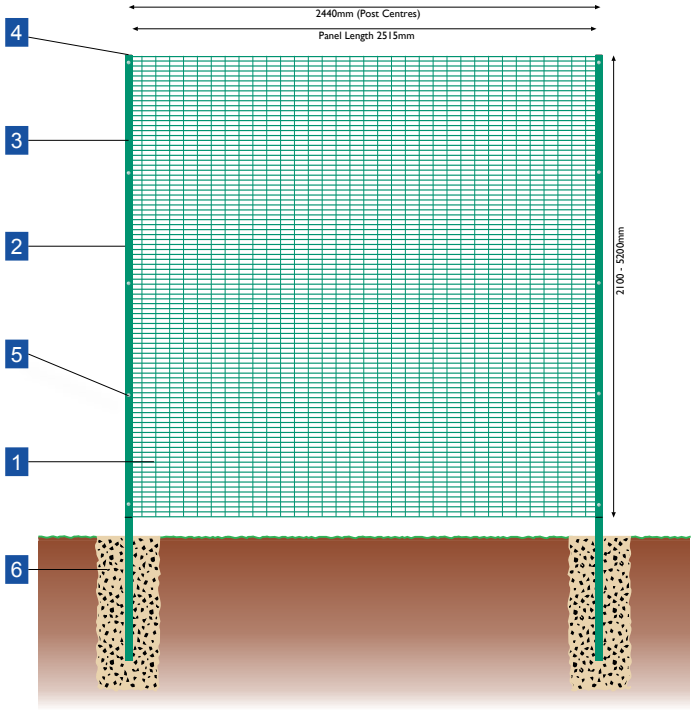


Construction Table Key

1. Mesh panel - mesh size 12.5 x 76.2mm - 4mm wire
2. Post size varies with height (see table)
3. Clamp bar varies with height (see table)
4. Plastic cap varies with post size (see table)
5. M8 x (varies) Cup square security bolt, M8 shear nut, M8 washer
6. Concrete foundation

| Nominal Fence Height | Panel Size Height x Width (mm) | Post Size (mm) Ends/Inters | Overall Length Of Post | Number of Fixings | |
|---|---|---|---|---|---|
| | | | | Ends/Inters (1 Clamp) | Corners (2 Clamps) |
| 1.8 | 1800 x 2515 | 60 x 60 | 2480 | 7 | 14 |
| 2.1 | 2135 x 2515 | 60 x 60 | 2800 | 8 | 16 |
| 2.4 | 2440 x 2515 | 60 x 60 | 3200 | 9 | 18 |
| 3.0 | 3000 x 2515 | 80 x 80 | 3900 | 11 | 22 |
| 5.2 | 5200 x 2515 | 120 x 120 | 6500 | 18 | 36 |

Subject to change

## Side Elevation

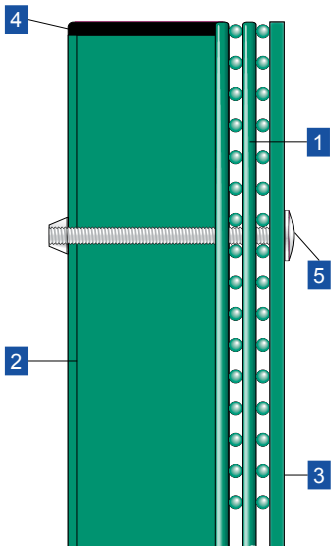


## Plan View

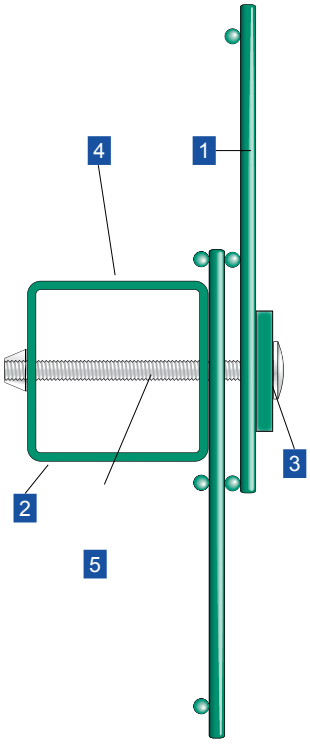


## Post Configurations

Intermediate Post

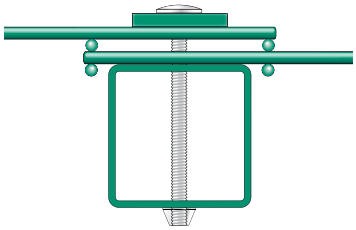

End Post

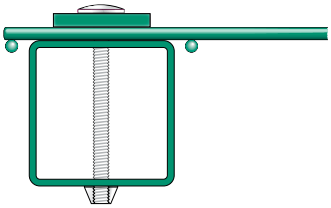

External Corner Post

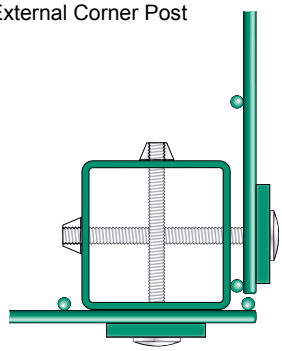

Internal Corner Post

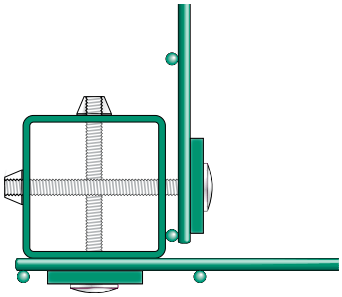

# Protek Gates

## Protek Gates

*The security mesh gates that Alexandra Security Products manufacture are complimentary to the range of mesh shown. Used in multiple applications, these gates are manufactured to a very high standard in our own workshops and come complete with posts, hinges, dropbolts and padlockable slidelatch. The gate frame is made using RHS frame whilst the posts vary in size ranging from 80 x 80mm RHS up to 200 x 200mm RHS.*

## Gate Accessories

*Page 21 shows a range of gate accessories that can be fitted to the gate at manufacture stage or retro-fitted after. This allows the gates to be used in numerous applications. Included in the range is the panic latch with shroud for fire exit gates, digital locks single and double sided and other locking devices.*

## Finish

*All gates are hot dipped galvanised to BS EN ISO 1461 and can be polyester powder coated to BS EN 13438.*

## Manufacturing

*Alexandra Security Products manufactures gates using the same high quality mesh we use for fencing systems, Bespoke gates are made to measure in our workshop, to compliment the fencing system they are made to fit. Our large number of accessories can be added to our gate systems giving excellent perimeter protection qualities for many different applications. Both pedestrian and vehicle gates can be made depending on customer requirements.*

# Gate Accessories

Panic Latch:
Allows the gate to be opened quickly without wasting time with a padlock. These are used on gates where a fire escape route is planned.

Shroud:
The shroud is an effective method of protecting the panic latch from being tampered with and is fitted during the manufacturing process.

Digital Lock:
A single or double sided digital lock is ideal where the gate is being accessed constantly, no more key cutting, just enter the code to gain access.

Specialist Gate Locks:
These locks can be fitted to a gate to allow key entry, available in different styles and different finishes.

# Understanding Gate Specification

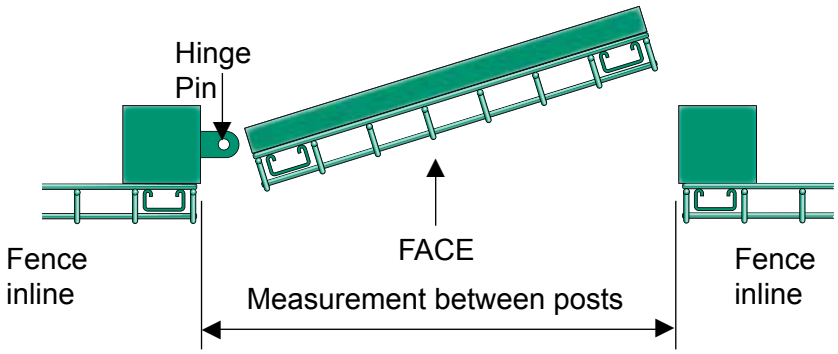


This gate:
Single leaf, left hand hung, opening into site, fence inline, (customer measurement/mm) between posts.

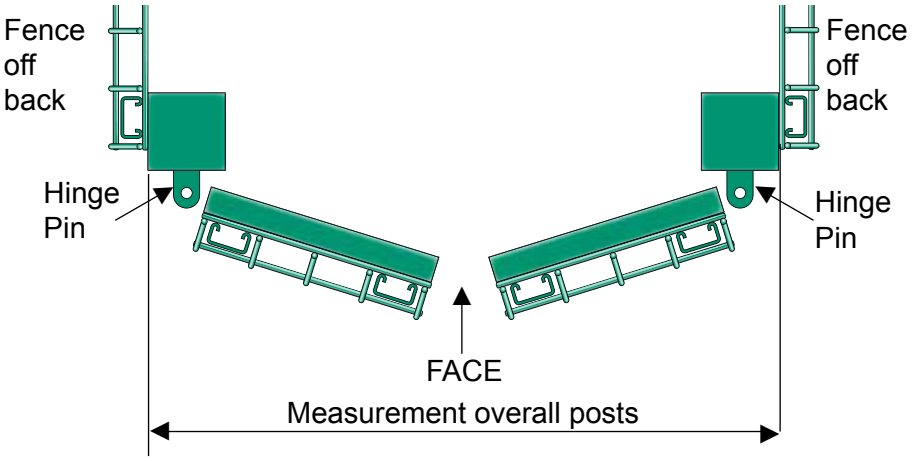


This gate:
Double leaf, front hung, opening out, fence off back, (customer measurement/mm) overall posts.

# Specification

alexandra
Mesh Fence Systems

## Protek 1000 - Specification Clauses
*To be read with Preliminaries/General conditions*

*Open mesh steel panel general purpose fencing / gates*
- *Manufacturer: Alexandra Security Products, Tel: 01892 833001, Email: sales@alexandrasecurity.com*
- *Reference: Protek 1000 - Profiled Mesh Panel System*
- *Height ____* Nominal height ____* Mesh & wire 200 x 55mm mesh, 5mm nominal wire with profiles, galvanised and polyester powder coated. Posts __ x __mm* RHS, galvanised and polyester powder coated with 55 x 30mm clips.*
- *Fixings: M6 x 30mm stainless steel pin hex dome head security screw.*
- *Post centres: Maximum post centres: 3.03m*
- *Foundation: Fence post holes must be sized to provide at least 75mm of concrete on all sides of fence post.*
- *Ground clearance: Bottom of fencing to be approx 50mm above final ground level.*
- *Other requirements: Polyester powder coated RAL ____ (colour selected from RAL chart)*

## Protek 2000 - Specification Clauses
*To be read with Preliminaries/General conditions*

*Open mesh steel panel general purpose fencing / gates*
- *Manufacturer: Alexandra Security Products, Tel: 01892 833001, Email: sales@alexandrasecurity.com*
- *Reference: Protek 2000 - Profiled Mesh Panel System*
- *Height ____* Nominal height ____* Mesh & wire 200 x 55mm mesh, 5mm nominal wire with profiles, galvanised and polyester powder coated. Posts 60 x 40mm RHS, galvanised and polyester powder coated with 41 x 21 x 1.5mm channel clamp bars galvanised and polyester powder coated to match fencing*
- *Fixings: M10 x 100 Cup square security bolt, M10 shear nut, M10 washer.*
- *Post centres: Maximum post centres: 2.51m*
- *Foundation: Fence post holes must be sized to provide at least 75mm of concrete on all sides of fence post.*
- *Ground clearance: Bottom of fencing to be approx 50mm above final ground level.*
- *Other requirements: Polyester powder coated RAL ____ (colour selected from RAL chart)*

## Protek 3000 - Specification Clauses
*To be read with Preliminaries/General conditions*

*Open mesh steel panel general purpose fencing / gates*
- *Manufacturer: Alexandra Security Products, Tel: 01892 833001, Email: sales@alexandrasecurity.com*
- *Reference: Protek 3000 - Profiled Mesh Panel System*
- *Height ____* Nominal height ____* Mesh & wire 165 x 38mm mesh, 5mm nominal wire with profiles, galvanised and polyester powder coated. Posts 60 x 40mm RHS, galvanised and polyester powder coated with 41 x 21 x 1.5mm channel clamp bars galvanised and polyester powder coated to match fencing*
- *Fixings: M10 x 100 Cup square security bolt, M10 shear nut, M10 washer.*
- *Post centres: Maximum post centres: 2.485m*
- *Foundation: Fence post holes must be sized to provide at least 75mm of concrete on all sides of fence post.*
- *Ground clearance: Bottom of fencing to be approx 50mm above final ground level.*
- *Other requirements: Polyester powder coated RAL ____ (colour selected from RAL chart)*

** See relevant product page for available heights, post sizes and clamp sizes*

# Specification

## Protek Twinwire 868/656 - Specification Clauses
*To be read with Preliminaries/General conditions*

*Open mesh steel panel general purpose fencing / gates*
- *Manufacturer: Alexandra Security Products, Tel: 01892 833001, Email: sales@alexandrasecurity.com*
- *Reference: Protek Twinwire - Double Wire Panel System*
- *Height ____* Nominal height ____* Mesh & wire 200 x 50mm mesh; two 8/6mm horizontal wires, one 6/5mm vertical wire, galvanised and polyester powder coated. Posts __ x __mm* RHS, galvanised and polyester powder coated with 40 x 5mm flat clamp strips galvanised and polyester powder coated to match post.*
- *Fixings: M8 x 40mm stainless steel pin hex dome head security screw.*
- *Post centres: Maximum post centres: 2.52m*
- *Foundation: Fence post holes must be sized to provide at least 75mm of concrete on all sides of fence post.*
- *Ground clearance: Bottom of fencing to be approx 50mm above final ground level.*
- *Other requirements: Polyester powder coated RAL ____ (colour selected from RAL chart)*

## Protek Rebound - Specification Clauses
*To be read with Preliminaries/General conditions*

*Open mesh steel panel general purpose fencing / gates*
- *Manufacturer: Alexandra Security Products, Tel: 01892 833001, Email: sales@alexandrasecurity.com*
- *Reference: Protek Rebound - Double Wire Panel System*
- *Height ____* Nominal height ____* Mesh & wire 66.5 x 50mm up to 1.2m, thereafter 200 x 50mm mesh; two 8mm horizontal wires, one 6mm vertical wire, galvanised and polyester powder coated. Posts __ x __mm* RHS, galvanised and polyester powder coated with 40 x 5mm flat clamp strips galvanised and polyester powder coated to match post.*
- *Fixings: M8 x 40mm stainless steel pin hex dome head security screw.*
- *Post centres: Maximum post centres: 2.52m*
- *Foundation: Fence post holes must be sized to provide at least 75mm of concrete on all sides of fence post.*
- *Ground clearance: Bottom of fencing to be approx 50mm above final ground level.*
- *Other requirements: Polyester powder coated RAL ____ (colour selected from RAL chart)*

## Protek 358 - Specification Clauses
*To be read with Preliminaries/General conditions*

*Open mesh steel panel general purpose fencing / gates*
- *Manufacturer: Alexandra Security Products, Tel: 01892 833001, Email: sales@alexandrasecurity.com*
- *Reference: Protek 358 - Flat Panel System*
- *Height ____* Nominal height ____* Mesh & wire 76.2 x 12.5mm mesh, 4mm wire, galvanised and polyester powder coated. Posts __ x __mm* RHS, galvanised and polyester powder coated with __ x __mm* flat clamp strips, galvanised and polyester powder coated to match post.*
- *Fixings: M8 Cup square security bolt, M8 shear nut, M8 washer*
- *Post centres: Maximum post centres: 2.44m*
- *Foundation: Fence post holes must be sized to provide at least 75mm of concrete on all sides of fence post.*
- *Ground clearance: Bottom of fencing to be approx 50mm above final ground level.*
- *Other requirements: Polyester powder coated RAL ____ (colour selected from RAL chart)*

** See relevant product page for available heights, post sizes and clamp sizes*

# Notes

alexandra
Mesh Fence Systems

# Notes

# Notes

alexandra
Mesh Fence Systems

# Notes

# alexandra
## Mesh Fence Systems

## Profiled Mesh Systems

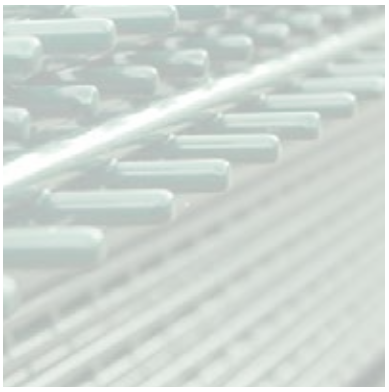

*Alexandra Security Products*
*Unit 1 Perimeter Works, Whetsted Road*
*Five Oak Green, Tonbridge TN12 6PZ*
*Telephone: 01892 833001*
*Facsimile: 01892 838083*
*Email: sales@alexandrasecurity.com*
*www.alexandrasecurity.com*



© Copyright -
Alexandra Security Products E&OE