ROGER MAYER

APPLICATION NOTE

VISION WAH SPECIAL

SWITCH PRESSURE AND VOLUME RANGE ADJUSTMENTS

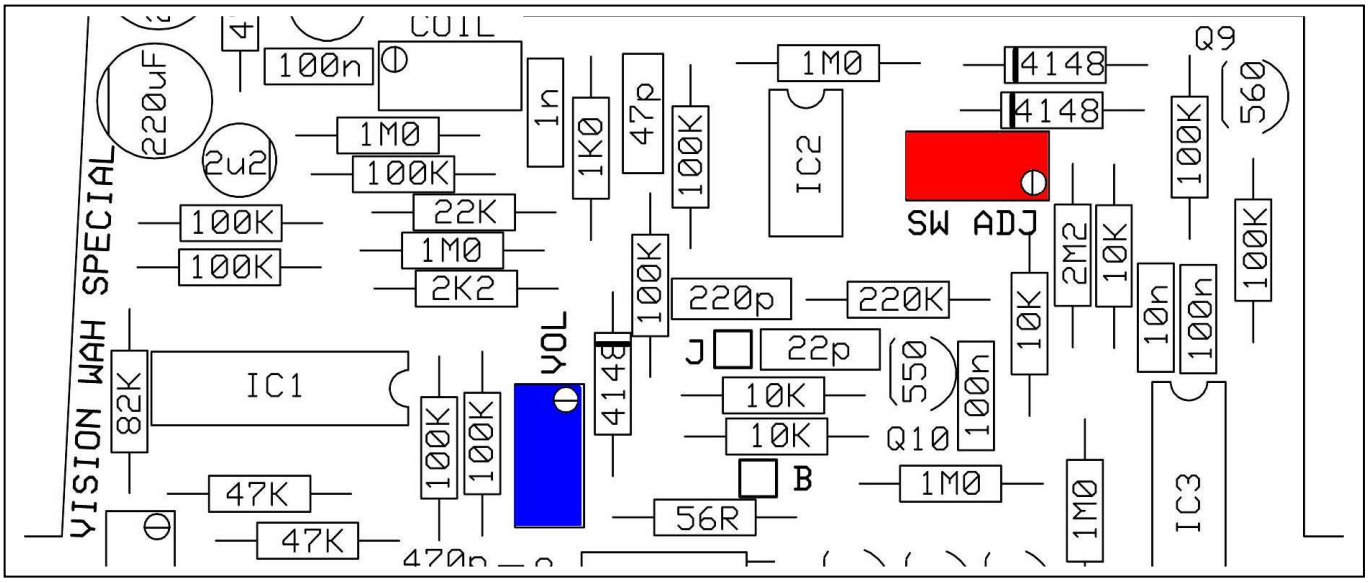

User Adjustments

Switch Pressure: This can be adjusted by turning the multi turn preset marked SW ADJ slowly and in small increments from the factory preset position. Test the feel of the switch and if necessary adjust again until the required feel is found.

Volume Range: The Volume Range is factory set to about 20Db and this range can be adjusted with multi turn preset marked VOL VOL. As this a multi turn preset it will take a few turns or so to hear a difference and this preset does not allow for complete silence but rather gives a useful control range for the player when performing to give expression. After all you still have a VOLUME control on the Guitar that can be used in conjunction with the Volume function to give a wide range of performance control.

DANGER Do not adjust the other two presets as this will cause the pedal malfunction due to not being correctly set up. The setup procedure should be left to competent technicians with the correct test equipment and really cannot be set by trial and error.