MITSUBISHI HEAVY INDUSTRIES, LTD.

Our Technologies, Your Tomorrow

R410A

2014

High Performance Air-Conditioning

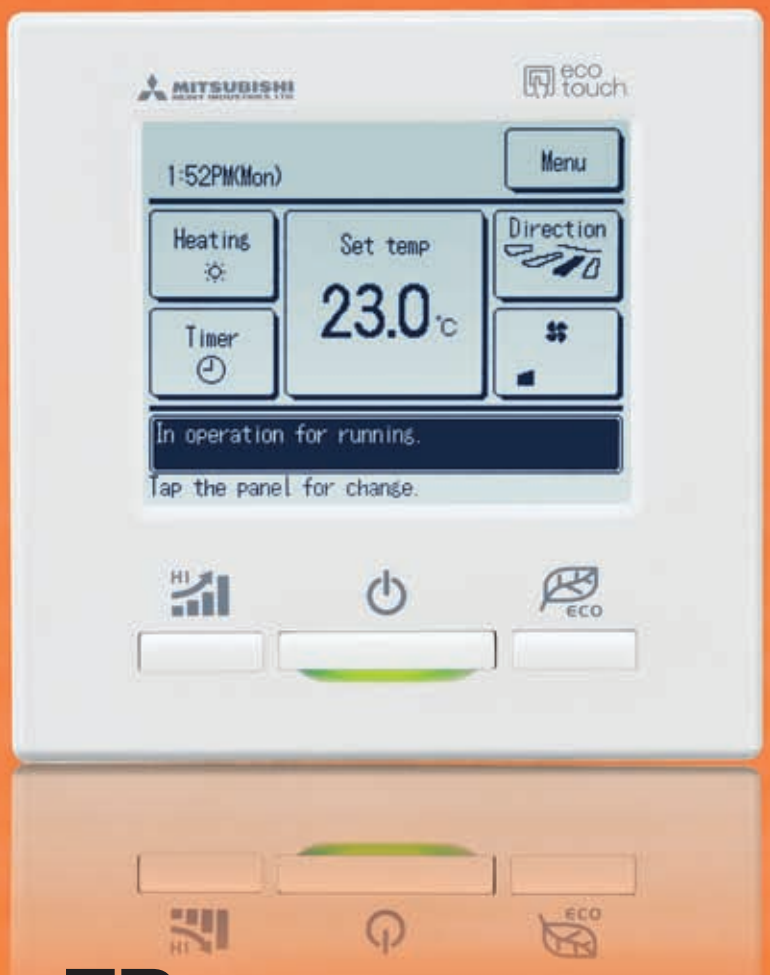

FD series

Inverter Packaged Air-Conditioners

50/60Hz

14P01E

Hyper Inverter

Our new advanced technology has realized high efficiency, strong heating and long piping.
This contributes to the environmental protection through energy saving and permits installation of the units (3~6HP) considering a heating operation under temperature conditions down to -20˚C and design flexibility has been improved by extension of piping length to 100m.

Line up

HP

	1.5	2	2.5	3	4	5	6	8	10
Hyper Inverter	●	●	●	●	●	●	●	–	–

Blue Fin

SRC40ZMX-S (1.5HP)
SRC50ZMX-S (2.0HP)
SRC60ZMX-S (2.5HP)

Blue Fin

FDC71VNX (3.0HP)

FDC100VNX/VSX (4.0HP)
FDC125VNX/VSX (5.0HP)
FDC140VNX/VSX (6.0HP)

Strong heating (in case of 3~6HP)

-20˚C : Heating operation down to -20˚C
-15˚C : Nominal heating capacity maintained at -15˚C

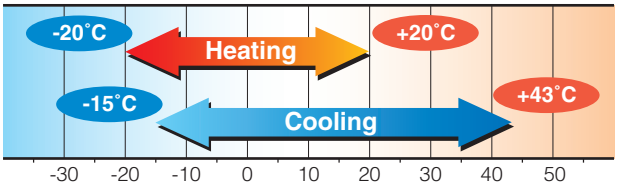

Max.heating capacity (kW)

	Hyper Inverter	Micro Inverter
FDC100VSX(4HP, 3phase 380V)	**16.0**	12.5
FDC125VSX(5HP, 3phase 380V)	**18.0**	16.0
FDC140VSX(6HP, 3phase 380V)	**20.0**	16.5

Long piping (in case of 4~6HP)

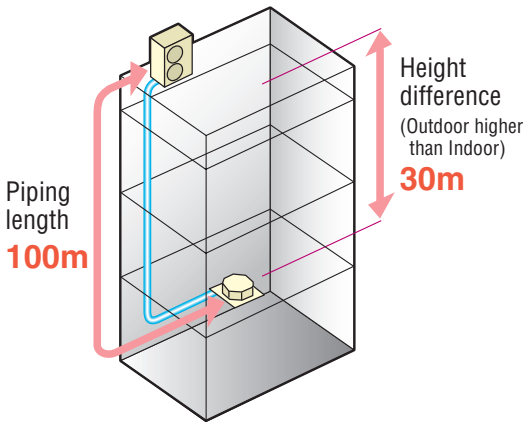

Leading powerful heating capacity in the industry

Thanks to optimization of refrigeration control with use of electric expansion valve and development of new twin rotary compressors, max heating capacity has been increased. Hyper Inverter series can reach the set temperature very quickly, keeping nominal heating capacity when outdoor temperature is -15˚C.
It is effective to be used even in cold area.

Heating capacity (in case of 5HP, 3phase 380V)

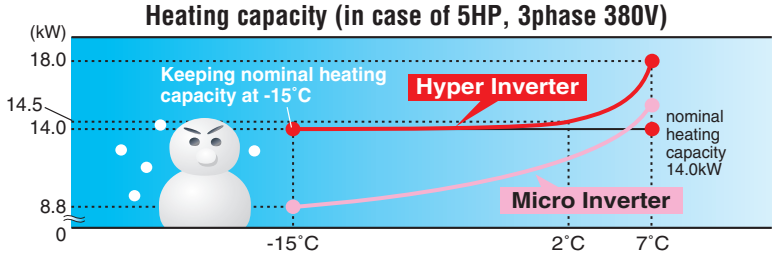

model name	nominal heating capacity (kW at outdoor temperature of 7˚C)	heating capacity at outdoor temperature of -15˚C
FDC100VSX(4HP, 3phase 380V)	11.2kW	11.2kW
FDC125VSX(5HP, 3phase 380V)	14.0kW	14.0kW
FDC140VSX(6HP, 3phase 380V)	16.0kW	16.0kW

Please refer to our technical manual for installation conditions, operation range and heating/cooling capacities. (including 1phase 220V)

Temperature of supply air can reach 40˚C in 4 minutes after start up under low temperature operation conditions (at both indoor and outdoor temperature of 2˚C) and can reach 50˚C in 8 minutes after that.

Heating capacity

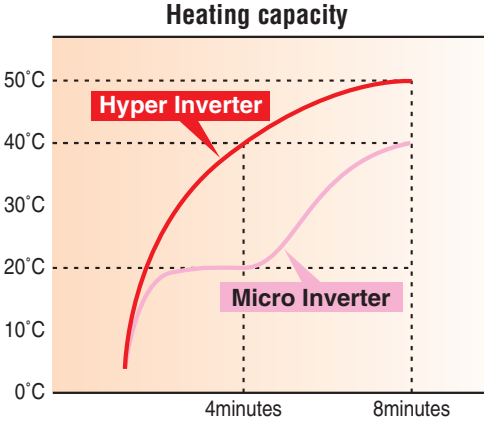

MITSUBISHI HEAVY INDUSTRIES, LTD.

Micro Inverter

Line up

HP

	1.5	2	2.5	3	4	5	6	8	10
Micro Inverter	–	–	–	–	●	●	●	●	●

FDC100VN/VS (4.0HP)
FDC125VN/VS (5.0HP)
FDC140VN/VS (6.0HP)

FDC200VS (8.0HP)

FDC250VS (10.0HP)

Fits into elevators

Size reduction and high efficiency performance on the DC twin rotary compressors (Micro Inverter 4-6HP)

Employment of DC twin rotary compressor has enabled to utilize a high-speed range of up to 120 rps at the maximum to secure the required capacity.
Optimum compressor control has been realized by employing the vector control* and the starting current has been improved significantly compared with former models. Moreover, vibration has been reduced.

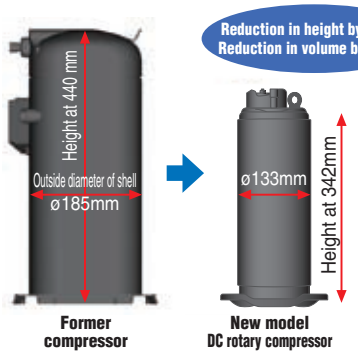

* Vector control means a. technique to realize an optimum control by converting the current wave to a smooth sinusoidal waveform

Employment of the scroll inverter compressors (8/10HP)

A control over wide range of capacity and a high efficiency has been realized by inverter-driven scroll compressors.
In addition, the starting current significantly is improved.
The size has also been reduced by 3.2% in height and 31.8% in volume.

Wide range of operation

Our new advanced technology has expanded the heating and cooling operation range.
This permits installation of the units under a low outdoor temperature conditions down to -20˚C In heating operation and -15˚C in cooling operation.

(FDC 100/125/140)

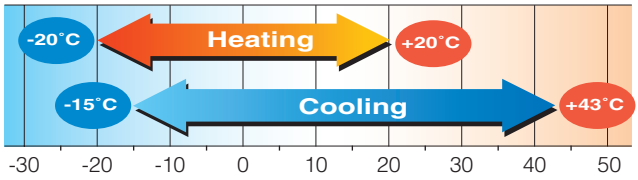

Standard Inverter

Line up

HP

	1.5	2	2.5	3	3.5	4	5	6	8	10
Standard Inverter	–	–	–	●	●	–	–	–	–	–

FDC71VNP (3.0HP)

FDC90VNP (3.5HP)

Compact Design of outdoor units

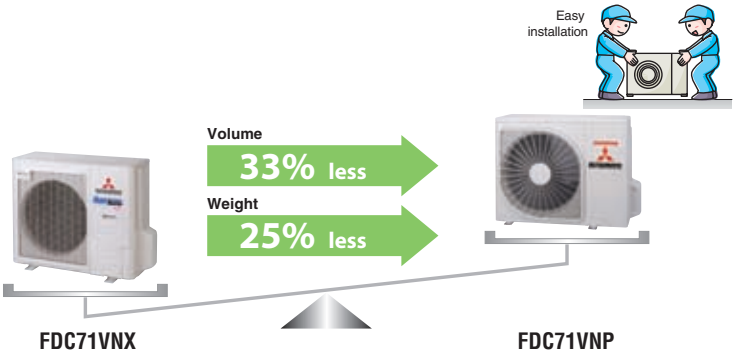

High SEER & SCOP Refer to page 41

(in case of indoor unit: FDT71VF1)

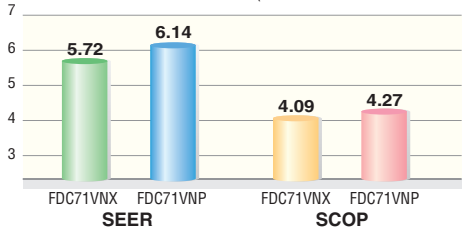

Though the nominal efficiency is lower than that of FDC71VNX (Hyper inverter), higher SEER & SCOP are achieved by optimizing control.

Ceiling Cassette -4way- Indoor units

FDT-FDTC

Individual flap control system

According to room temperature conditions, four directions of air flow can be controlled individually by following Flap control system.
As individual flap control is available even after installation, installation area became wider than before.

Due to optimization of outlet design of air flow with our new advanced technology, sufficient air flow is secured and long reach of air flow is realized. (FDT)

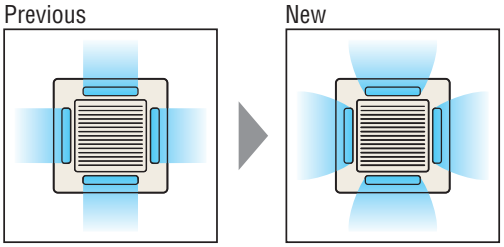

Flap control system

The flap can swing within the range of upper and lower flap position selected with wired remote control. (this system is applied for FDEN, SRK type also)

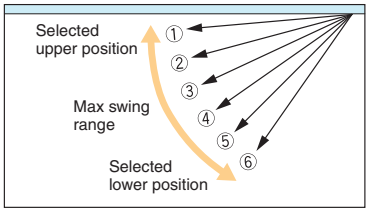

∗Wireless remote control and RCH-E3 is not applicable to the Individual flap control system and the Flap control system.

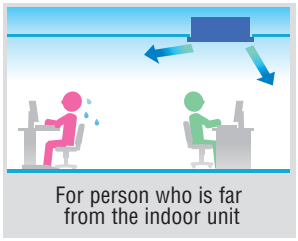

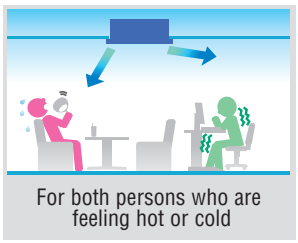

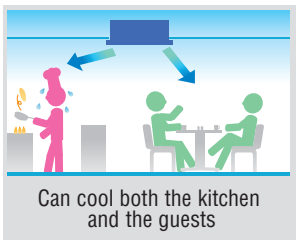

The thinnest design

Thanks to new design of heat exchanger changed from 2 parts to 1 part, the height of indoor unit is reduced drastically.

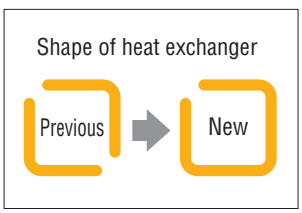

High efficiency

- **Reduction of air flow pressure loss**

  Expansion of outlet air flow area realizes reduction of pressure loss caused by air flow in the indoor unit. Load of fan motor is decreased and efficiency is increased.

- **Increase of heat transfer efficiency**

  Applying high efficient piping in heat exchanger and optimization of heat exchanger (2parts ➡ 1part) increases heat transfer efficiency.

Duct Connected -High Static Pressure-

FDU

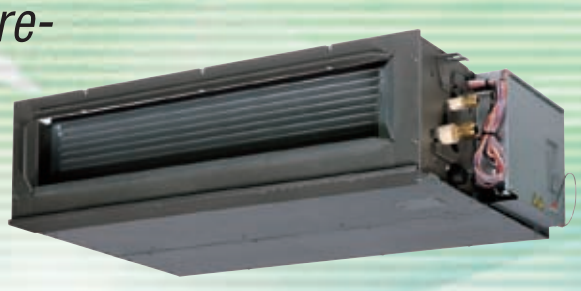

External Static Pressure (E.S.P.) control (FDU71~140)

You can set External Static Pressure (E.S.P.) by method of manual setting on remote control. Indoor unit will control fan-speed to keep rated air flow volume at each fan speed setting. You can set required E.S.P. by wired remote control that calculated with the set air flow rate and pressure loss of the duct connected.

RC-E5

E.S.P. button

External Static Pressure (E.S.P.) can be set by E.S.P. button.

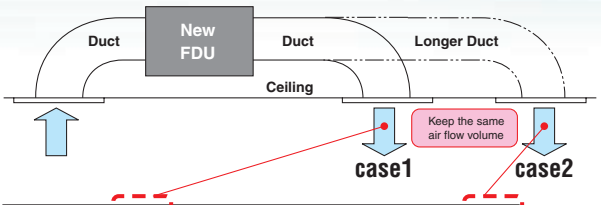

Setting No.	No.8	No.9	No.10	No.11	No.12	No.13	No.14	No.15
E.S.P.	80Pa	90Pa	100Pa	110Pa	120Pa	130Pa	140Pa	150Pa

*Range of 80~150 Pa is set at ex-factory default.
Range of 10~200 Pa is available by setting SW8-4 switch on at site.

<Expansion of external static pressure range>

Current		New
10~130Pa	➡	10~200Pa

Transparent inspection window

Dirt condition of the bottom of a drain pan can be checked through this transparent inspection window without removing drain pan.

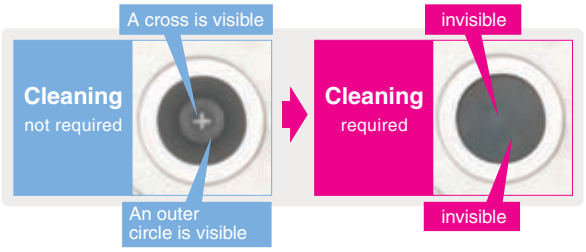

Reduction of sound pressure level

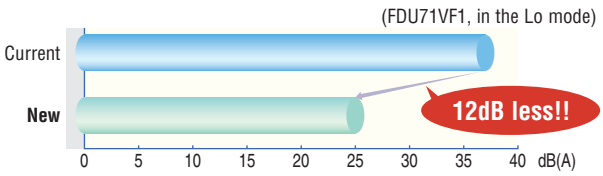

	Current		New	Lo mode
FDU71/100	37	➡	25	12dB less!!
FDU125/140	38	➡	30	8dB less!!

Thin design & Reduction of weight

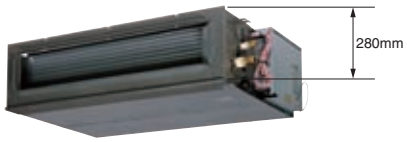

<Thin design>

	Current		New	
FDU71	297	➡	280	17mm less!!
FDU100/125/140	350	➡	280	70mm less!!

<Reduction of weight>

	Current		New	
FDU71	40	➡	34	6kg less!!
FDU100/125/140	63	➡	34	29kg less!!

DUCT CONNECTED -Middle Static Pressure-

FDUM

FDUM has the same E.S.P. control (refer to page 14) **and Transparent inspection window.**

SINGLE [OUTDOOR UNIT : INDOOR UNIT = 1 : 1]

Type				Capacity				
				Hyper Inverter				
		HP		1.5	2.0	2.5	3.0	4.0
		kW		4.0	5.0	6.0	7.1	10.0
		Btu/h		13,700	17,100	19,100	23,900	34,100
		kcal/h		3,440	4,300	4,816	6,020	8,600
CEILING CASSETTE	4way FDT 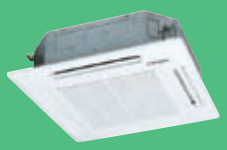	Set	1phase	**FDT40ZMXVF**	**FDT50ZMXVF**	**FDT60ZMXVF**	**FDT71VNXVF1**	**FDT100VNXVF1**
			3phase					**FDT100VSXVF1**
		Indoor unit		FDT40VF	FDT50VF	FDT60VF	FDT71VF1	FDT100VF1
		Outdoor unit	1phase	SRC40ZMX-S	SRC50ZMX-S	SRC60ZMX-S	FDC71VNX	FDC100VNX
			3phase					FDC100VSX
	4way compact (600 x 600mm) FDTC	Set	1phase	**FDTC40ZMXVF**	**FDTC50ZMXVF**	**FDTC60ZMXVF**		
		Indoor unit		FDTC40VF	FDTC50VF	FDTC60VF		
		Outdoor unit	1phase	SRC40ZMX-S	SRC50ZMX-S	SRC60ZMX-S		
DUCT CONNECTED	High Static pressure FDU	Set	1phase				**FDU71VNXVF1**	**FDU100VNXVF1**
			3phase					**FDU100VSXVF1**
		Indoor unit					FDU71VF1	FDU100VF1
		Outdoor unit	1phase				FDC71VNX	FDC100VNX
			3phase					FDC100VSX
	Low/Middle Static pressure FDUM	Set	1phase	**FDUM40ZMXVF**	**FDUM50ZMXVF**	**FDUM60ZMXVF**	**FDUM71VNXVF1**	**FDUM100VNXVF1**
			3phase					**FDUM100VSXVF1**
		Indoor unit		FDUM40VF	FDUM50VF	FDUM60VF	FDUM71VF1	FDUM100VF1
		Outdoor unit	1phase	SRC40ZMX-S	SRC50ZMX-S	SRC60ZMX-S	FDC71VNX	FDC100VNX
			3phase					FDC100VSX
CEILING SUSPENDED	FDEN	Set	1phase	**FDEN40ZMXVF**	**FDEN50ZMXVF**	**FDEN60ZMXVF**	**FDEN71VNXVF1**	**FDEN100VNXVF1**
			3phase					**FDEN100VSXVF1**
		Indoor unit		FDEN40VF	FDEN50VF	FDEN60VF	FDEN71VF1	FDEN100VF1
		Outdoor unit	1phase	SRC40ZMX-S	SRC50ZMX-S	SRC60ZMX-S	FDC71VNX	FDC100VNX
			3phase					FDC100VSX
WALL MOUNTED	SRK NEW	Set	1phase					
		Indoor unit						
		Outdoor unit	1phase					
FLOOR STANDING	FDF	Set	1phase				**FDF71VNXVD1**	**FDF100VNXVD1**
			3phase					**FDF100VSXVD1**
		Indoor unit					FDF71VD1	FDF100VD1
		Outdoor unit	1phase				FDC71VNX	FDC100VNX
			3phase					FDC100VSX
OUTDOOR UNIT				NEW				

Range (Rated Cooling Capacity)

		Micro Inverter					Standard Inverter	
5.0	6.0	4.0	5.0	6.0	8.0	10.0	3.0	3.5
12.5	14.0	10.0	12.5	14.0	20.0	25.0	7.1	9.0
42,700	47,800	34,100	42,700	47,800	68,300	85,400	23,900	30,300
10,750	12,040	8,600	10,750	12,040	17,200	21,500	6,020	7,630
FDT125VNXVF	**FDT140VNXVF**	**FDT100VNVF1**	**FDT125VNVF**	**FDT140VNVF**			**FDT71VNPVF1**	**FDT90VNPVF1**
FDT125VSXVF	**FDT140VSXVF**	**FDT100VSVF1**	**FDT125VSVF**	**FDT140VSVF**				
FDT125VF	FDT140VF	FDT100VF1	FDT125VF	FDT140VF			FDT71VF1	FDT100VF1
FDC125VNX	FDC140VNX	FDC100VN	FDC125VN	FDC140VN			FDC71VNP	FDC90VNP
FDC125VSX	FDC140VSX	FDC100VS	FDC125VS	FDC140VS				
FDU125VNXVF	**FDU140VNXVF**	**FDU100VNVF1**	**FDU125VNVF**	**FDU140VNVF**			**FDU71VNPVF1**	**FDU90VNPVF1**
FDU125VSXVF	**FDU140VSXVF**	**FDU100VSVF1**	**FDU125VSVF**	**FDU140VSVF**	**FDU200VSVF**	**FDU250VSVF**		
FDU125VF	FDU140VF	FDU100VF1	FDU125VF	FDU140VF	FDU200VF	FDU250VF	FDU71VF1	FDU100VF1
FDC125VNX	FDC140VNX	FDC100VN	FDC125VN	FDC140VN			FDC71VNP	FDC90VNP
FDC125VSX	FDC140VSX	FDC100VS	FDC125VS	FDC140VS	FDC200VS	FDC250VS		
FDUM125VNXVF	**FDUM140VNXVF**	**FDUM100VNVF1**	**FDUM125VNVF**	**FDUM140VNVF**			**FDUM71VNPVF1**	**FDUM90VNPVF1**
FDUM125VSXVF	**FDUM140VSXVF**	**FDUM100VSVF1**	**FDUM125VSVF**	**FDUM140VSVF**				
FDUM125VF	FDUM140VF	FDUM100VF1	FDUM125VF	FDUM140VF			FDUM71VF1	FDUM100VF1
FDC125VNX	FDC140VNX	FDC100VN	FDC125VN	FDC140VN			FDC71VNP	FDC90VNP
FDC125VSX	FDC140VSX	FDC100VS	FDC125VS	FDC140VS				
FDEN125VNXVF	**FDEN140VNXVF**	**FDEN100VNVF1**	**FDEN125VNVF**	**FDEN140VNVF**			**FDEN71VNPVF1**	**FDEN90VNPVF1**
FDEN125VSXVF	**FDEN140VSXVF**	**FDEN100VSVF1**	**FDEN125VSVF**	**FDEN140VSVF**				
FDEN125VF	FDEN140VF	FDEN100VF1	FDEN125VF	FDEN140VF			FDEN71VF1	FDEN100VF1
FDC125VNX	FDC140VNX	FDC100VN	FDC125VN	FDC140VN			FDC71VNP	FDC90VNP
FDC125VSX	FDC140VSX	FDC100VS	FDC125VS	FDC140VS				
							SRK71VNPZM	
							SRK71ZM-S	
							FDC71VNP	
FDF125VNXVD	**FDF140VNXVD**	**FDF100VNVD1**	**FDF125VNVD**	**FDF140VNVD**			**FDF71VNPVD1**	**FDF90VNPVD1**
FDF125VSXVD	**FDF140VSXVD**	**FDF100VSVD1**	**FDF125VSVD**	**FDF140VSVD**				
FDF125VD	FDF140VD	FDF100VD1	FDF125VD	FDF140VD			FDF71VD1	FDF100VD1
FDC125VNX	FDC140VNX	FDC100VN	FDC125VN	FDC140VN			FDC71VNP	FDC90VNP
FDC125VSX	FDC140VSX	FDC100VS	FDC125VS	FDC140VS				

CEILING CASSETTE -4way-

FDT

FDT 40/50/60/71/
100/125/140

R410A

Remote control (Option)

Wired

RC-EX1A RC-E5 RCH-E3

Wireless

RCN-T-36W-E

Point 1 Arrangement of installation balance of indoor unit

Checking from access ports with detachable covers at each corner, arrangement of installation balance of indoor unit can be available without removing a panel. Workability is improved and time of installation is reduced.

Point 2 Easy checking of drain pan

Easy checking of drain pan condition is available by removing corner lid only. Due to new design changing fan motor is available without removing a panel. Temporally setting of drain pan is also available.

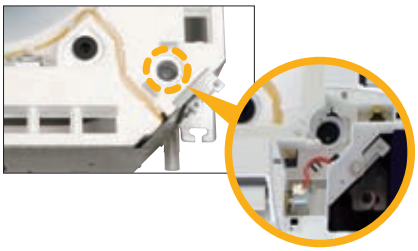

Point 3 700mm Drain Pump

Drain can be discharged upwards by 700mm from the ceiling surface. It allows a piping layout with a high degree of freedom Depending on the installation location and 260mm flexible hose as a standard equipment supports easy workability.

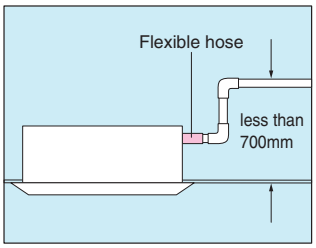

Dimensions (Unit:mm)

Models FDT40VF,50VF,60VF,71VF1

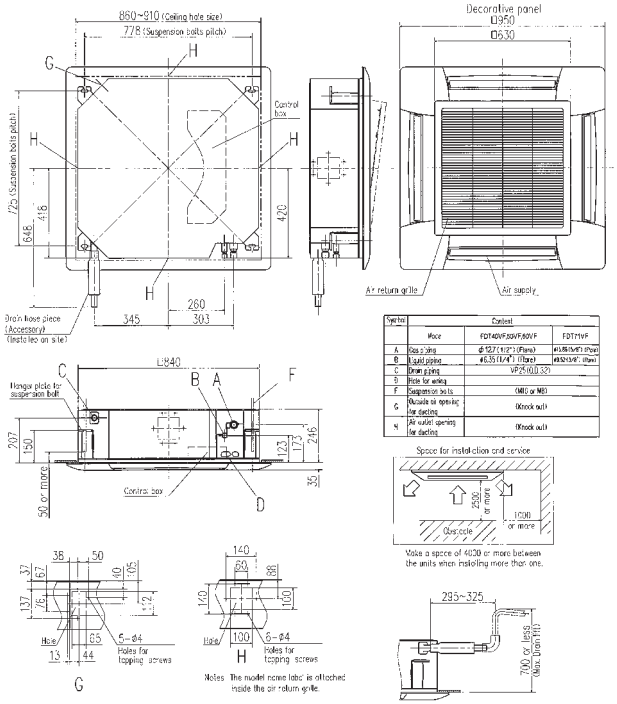

Models FDT100VF1,125VF,140VF

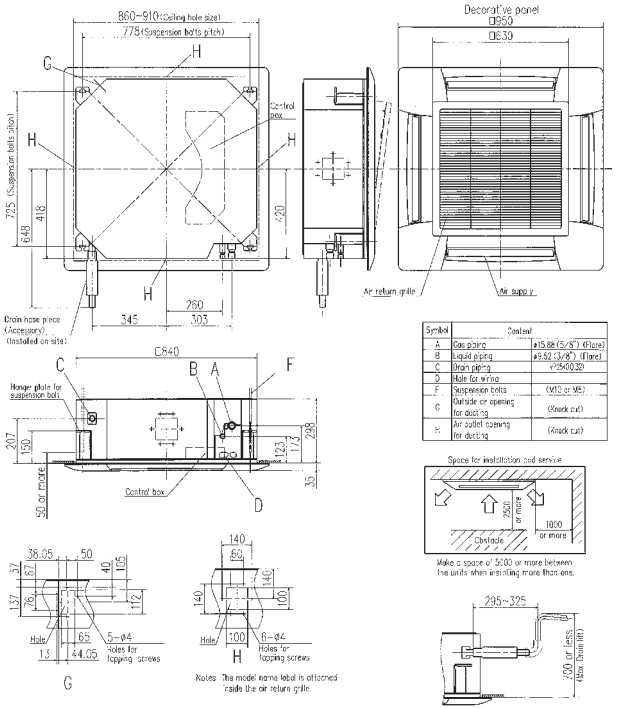

SPECIFICATIONS

				Hyper Inverter				
Set model name				FDT40ZMXVF	FDT50ZMXVF	FDT60ZMXVF	FDT71VNXVF1	FDT100VNXVF1
Indoor unit				FDT40VF	FDT50VF	FDT60VF	FDT71VF1	FDT100VF1
Outdoor unit				SRC40ZMX-S	SRC50ZMX-S	SRC60ZMX-S	FDC71VNX	FDC100VNX
Power source				1 Phase 220-240V 50Hz, 1 Phase 220V 60Hz				
Nominal cooling capacity (Min~Max)			kW	4.0 (1.1 ~ 4.7)	5.0 (1.1 ~ 5.6)	5.6 (1.1 ~ 6.3)	7.1 (3.2 ~ 8.0)	10.0 (4.0 ~ 11.2)
Nominal heating capacity (Min~Max)			kW	4.5 (0.6 ~ 5.4)	5.4 (0.6 ~ 6.3)	6.7 (0.6 ~ 7.1)	8.0 (3.6 ~ 9.0)	11.2 (4.0 ~ 12.5)
Power consumption		Cooling/Heating	kW	0.93 / 1.06	1.29 / 1.29	1.52 / 1.70	2.04 / 1.94	2.50 / 2.58
EER/COP		Cooling/Heating		4.30 / 4.25	3.88 / 4.19	3.68 / 3.94	3.48 / 4.12	4.00 / 4.34
Inrush current		220/230/240 V	A	5	5	5	5	5
Max. running current				12	15	15	17	24
Sound power level*1	Indoor	Cooling/Heating	dB(A)	55 / 55	55 / 55	60 / 60	64 / 64	65 / 65
	Outdoor	Cooling/Heating		63 / 63	63 / 63	64 / 64	66 / 66	70 / 70
Sound pressure level*1 ※	Indoor	Cooling (Hi/Me/Lo)		33 / 31 / 30	33 / 31 / 30	33 / 31 / 30	35 / 33 / 31	40 / 37 / 35
		Heating (Hi/Me/Lo)		33 / 31 / 30	33 / 31 / 30	33 / 31 / 30	35 / 33 / 31	40 / 37 / 35
	Outdoor	Cooling/Heating		50 / 50	54 / 50	54 / 54	51 / 48	48 / 50
Air flow ※	Indoor	Cooling (Hi/Me/Lo)	m^3/min	18 / 16 / 14	18 / 16 / 14	18 / 16 / 14	21 / 19 / 17	27 / 24 / 20
		Heating (Hi/Me/Lo)		18 / 16 / 14	18 / 16 / 14	18 / 16 / 14	21 / 19 / 17	27 / 24 / 20
	Outdoor	Cooling/Heating		36 / 33	40 / 33	41.5 / 39	60 / 50	100 / 100
Exterior dimensions	Indoor	HeightxWidthxDepth	mm	Unit: 246 x 840 x 840 Panel: 35 x 950 x 950				Unit: 298 x 840 x 840 Panel: 35 x 950 x 950
	Outdoor			640 x 800(+71) x 290			750 x 880(+88) x 340	1,300 x 970 x 370
Net weight	Indoor		kg	27.5(Unit:22 Panel:5.5)		29.5(Unit:24 Panel:5.5)		32.5(Unit:27 Panel:5.5)
	Outdoor			45			60	105
Ref.piping size	Liquid/Gas		ømm	6.35(1/4") / 12.7(1/2")			9.52(3/8") / 15.88(5/8")	
Refrigerant line (one way) length			m	Max.30			Max. 50	Max. 100
Vertical height differences		Outdoor is higher/lower	m	Max.20 / Max.20			Max.30 / Max.15	
Outdoor operating temperature range		Cooling	℃	-15~43*2				
		Heating		-15~20			-20~20	
Panel				T-PSA-3BW-E				
Air filter, Q'ty				Pocket plastic net x 1(Washable)				
Remote control (option)				wired:RC-EX1A, RC-E5, RCH-E3 wireless:RCN-T-36W-E				

SPECIFICATIONS

				Hyper Inverter				
Set model name				FDT125VNXVF	FDT140VNXVF	FDT100VSXVF1	FDT125VSXVF	FDT140VSXVF
Indoor unit				FDT125VF	FDT140VF	FDT100VF1	FDT125VF	FDT140VF
Outdoor unit				FDC125VNX	FDC140VNX	FDC100VSX	FDC125VSX	FDC140VSX
Power source				1 Phase 220-240V 50Hz, 1 Phase 220V 60Hz		3 Phase 380-415V 50Hz, 3 Phase 380V 60Hz		
Nominal cooling capacity (Min~Max)			kW	12.5 (5.0 ~ 14.0)	14.0 (5.0 ~ 16.0)	10.0 (4.0 ~ 11.2)	12.5 (5.0 ~ 14.0)	14.0 (5.0 ~ 16.0)
Nominal heating capacity (Min~Max)			kW	14.0 (4.0 ~ 17.0)	16.0 (4.0 ~ 18.0)	11.2 (4.0 ~ 16.0)	14.0 (4.0 ~ 18.0)	16.0 (4.0 ~ 20.0)
Power consumption		Cooling/Heating	kW	3.28 / 3.43	4.19 / 4.20	2.50 / 2.58	3.28 / 3.43	4.19 / 4.20
EER/COP		Cooling/Heating		3.81 / 4.08	3.34 / 3.81	4.00 / 4.34	3.81 / 4.08	3.34 / 3.81
Inrush current		220/230/240 V	A	5	5	5	5	5
Max. running current				26	26	15	15	15
Sound power level*1	Indoor	Cooling/Heating	dB(A)	68 / 68	68 / 68	65 / 65	68 / 68	68 / 68
	Outdoor	Cooling/Heating		70 / 70	72 / 72	70 / 70	70 / 70	72 / 72
Sound pressure level*1 ※	Indoor	Cooling (Hi/Me/Lo)		42 / 40 / 37	43 / 41 / 38	40 / 37 / 35	42 / 40 / 37	43 / 41 / 38
		Heating (Hi/Me/Lo)		42 / 40 / 37	43 / 41 / 38	40 / 37 / 35	42 / 40 / 37	43 / 41 / 38
	Outdoor	Cooling/Heating		48 / 50	49 / 52	48 / 50	48 / 50	49 / 52
Air flow ※	Indoor	Cooling (Hi/Me/Lo)	m^3/min	30 / 27 / 23	30 / 27 / 23	27 / 24 / 20	30 / 27 / 23	30 / 27 / 23
		Heating (Hi/Me/Lo)		30 / 27 / 23	30 / 27 / 23	27 / 24 / 20	30 / 27 / 23	30 / 27 / 23
	Outdoor	Cooling/Heating		100 / 100	100 / 100	100 / 100	100 / 100	100 / 100
Exterior dimensions	Indoor	HeightxWidthxDepth	mm	Unit: 298 x 840 x 840 Panel: 35 x 950 x 950				
	Outdoor			1,300 x 970 x 370				
Net weight	Indoor		kg	32.5(Unit:27 Panel:5.5)				
	Outdoor			105				
Ref.piping size	Liquid/Gas		ømm	9.52(3/8") / 15.88(5/8")				
Refrigerant line (one way) length			m	Max.100				
Vertical height differences		Outdoor is higher/lower	m	Max.30 / Max.15				
Outdoor operating temperature range		Cooling	℃	-15~43*2				
		Heating		-20~20				
Panel				T-PSA-3BW-E				
Air filter, Q'ty				Pocket plastic net x 1(Washable)				
Remote control (option)				wired:RC-EX1A, RC-E5, RCH-E3 wireless:RCN-T-36W-E				

The data are measured under the following conditions(ISO-T1).
Cooling:Indoor temp. of 27˚CDB, 19˚CWB, and outdoor temp. of 35˚CDB. Heating:Indoor temp. of 20˚CDB, and outdoor temp. of 7˚CDB, 6˚CWB.
*1 : Indicates the value in an anechoic chamber. During operation these values are somewhat higher due to ambient conditions.
*2 : If a cooling operation is conducted when the outdoor air temperature is –5˚C or lower, the outdoor unit should be installed at a place where it is not influenced by natural wind. If wind blows, the low pressure will drop and compressor frequency will increase, this will cause the capacity to drop and may cause the unit to break down.

※ Powerful-Hi can be selected. Sound level: 40/50ZMXVF 39dB, 60ZMXVF 46dB, 71VNXVF1 46dB, 100VN(S)XVF1 51dB, 125/140VN(S)XVF 51dB
Air flow: 40/50ZMXVF 20m^3/min, 60ZMXVF 28m^3/min, 71VNXVF1 28m^3/min, 100VN(S)XVF1 37m^3/min, 125/140VN(S)XVF 37m^3/min

CEILING CASSETTE -4way Compact (600 X 600mm)-

FDTC

R410A

Fits into standard 600 x 600 ceiling

FDTC 40/50/60

Remote control (Option)

Wired

RC-EX1A

RC-E5

RCH-E3

Wireless

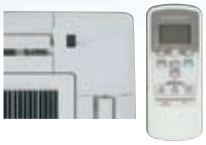

RCN-TC-24W-ER

Point 1 Taking OA (Outside Air) into inside

OA Spacer TC-OAS-E (option)
Joint Duct TC-OAD-E (option)

Utilizing OA spacer which comes as optional equipment, outside air can be taken inside.

Using 1 joint duct:
OA up to 1.3m³/min.
Using 2 joint ducts:
OA from 1.3 to 2.6m³/min.

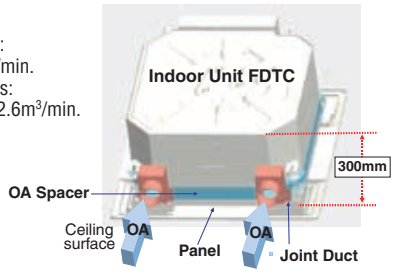

Point 2 Quiet operation

(Sound Pressure level in the Lo mode)

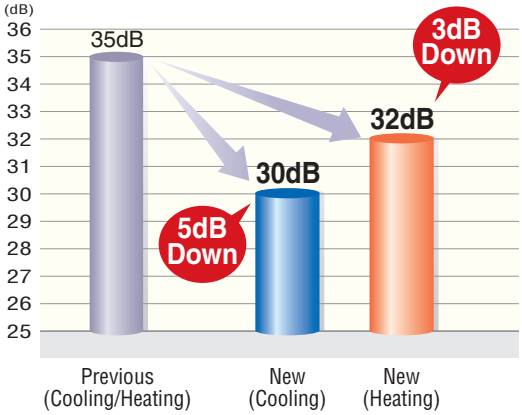

Point 3 "CLEARER" Air Flow

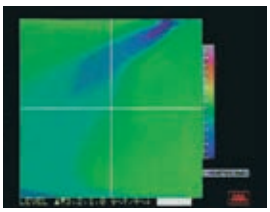

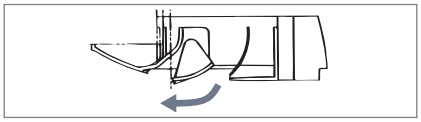

New shape & angled louver redirects the air current away from the ceiling, to reduce ceiling stains

Point 4 Installation Workability

For wireless control simply insert the infrared receiver kit on a corner of the panel

wireless remote control
RCN-TC-24W-ER

Point 5 Compact and Convenient

- **600mm Drain Pump**

Drain can be discharged upward by 600 mm from the ceiling surface close to the indoor unit.
It allows a piping layout with a high degree of freedom depending on the installation location.

- **600 x 600 ceiling**

Indoor unit size (W:570 x D:570) brings easy installation for 600 x 600 ceiling and Panel size (700 x 700) is suitable for 600 x 600 ceiling. Height is the industry's lowest height level 248mm and weight is 15kg only.

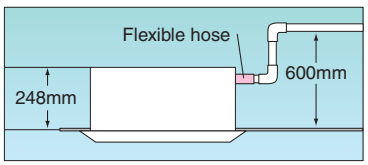

Dimensions (Unit:mm)

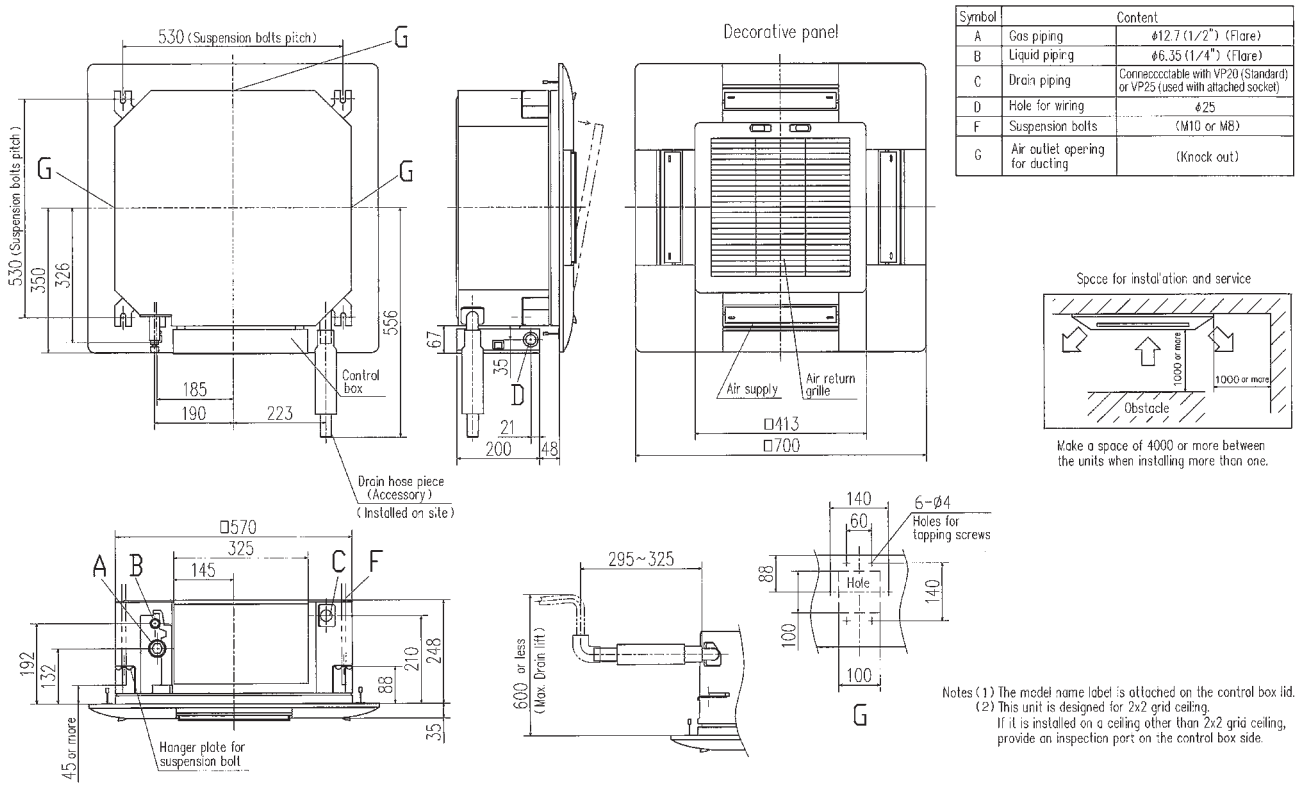

Symbol	Content	
A	Gas piping	ø12.7 (1/2") (Flare)
B	Liquid piping	ø6.35 (1/4") (Flare)
C	Drain piping	Connecccctable with VP20 (Standard) or VP25 (used with attached socket)
D	Hole for wiring	ø25
F	Suspension bolts	(M10 or M8)
G	Air outlet opening for ducting	(Knock out)

Notes (1) The model name label is attached on the control box lid.
(2) This unit is designed for 2x2 grid ceiling.
If it is installed on a ceiling other than 2x2 grid ceiling, provide an inspection port on the control box side.

SPECIFICATIONS

				Hyper Inverter		
Set model name				FDTC40ZMXVF	FDTC50ZMXVF	FDTC60ZMXVF
Indoor unit				FDTC40VF	FDTC50VF	FDTC60VF
Outdoor unit				SRC40ZMX-S	SRC50ZMX-S	SRC60ZMX-S
Power source				1 Phase 220-240V 50Hz, 1 Phase 220V 60Hz		
Nominal cooling capacity (Min~Max)			kW	4.0 (1.1 ~ 4.7)	5.0 (1.1 ~ 5.6)	5.6 (1.1 ~ 6.3)
Nominal heating capacity (Min~Max)			kW	4.5 (0.6 ~ 5.4)	5.4 (0.6 ~ 6.3)	6.7 (0.6 ~ 6.7)
Power consumption		Cooling/Heating	kW	1.04 / 1.10	1.56 / 1.45	1.99 / 2.07
EER/COP		Cooling/Heating		3.85 / 4.09	3.21 / 3.72	2.81 / 3.24
Inrush current		220/230/240 V	A	5	5	5
Max. running current				12	15	15
Sound power level*1	Indoor	Cooling/Heating	dB(A)	60 / 60	60 / 60	60 / 60
	Outdoor	Cooling/Heating		63 / 63	63 / 63	64 / 64
Sound pressure level*1 ※	Indoor	Cooling (Hi/Me/Lo)		42 / 36 / 30	42 / 36 / 30	46 / 39 / 30
		Heating (Hi/Me/Lo)		42 / 36 / 32	42 / 36 / 32	46 / 39 / 32
	Outdoor	Cooling/Heating		50 / 50	54 / 50	54 / 54
Air flow ※	Indoor	Cooling (Hi/Me/Lo)	m^3/min	11.5 / 9 / 7	11.5 / 9 / 7	13.5 / 10 / 7
		Heating (Hi/Me/Lo)		11.5 / 9 / 8	11.5 / 9 / 8	13.5 / 10 / 8
	Outdoor	Cooling/Heating		36 / 33	40 / 33	41.5 / 39
Exterior dimensions	Indoor	HeightxWidthxDepth	mm	Unit: 248 x 570 x 570 Panel: 35 x 700 x 700		
	Outdoor			640 x 800(+71) x 290		
Net weight	Indoor		kg	18.5(Unit:15 Panel:3.5)		
	Outdoor			45		
Ref.piping size	Liquid/Gas		ømm	6.35(1/4") / 12.7(1/2")		
Refrigerant line (one way) length			m	Max.30		
Vertical height differences		Outdoor is higher/lower	m	Max.20 / Max.20		
Outdoor operating temperature range		Cooling	°C	-15~43*2		
		Heating		-15~20		
Panel				TC-PSA-25W-E		
Air filter, Q'ty				Pocket plastic net x 1(Washable)		
Remote control (option)				wired:RC-EX1A, RC-E5, RCH-E3 wireless:RCN-TC-24W-ER		

The data are measured under the following conditions(ISO-T1).
Cooling:Indoor temp. of 27˚CDB, 19˚CWB, and outdoor temp. of 35˚CDB. Heating:Indoor temp. of 20˚CDB, and outdoor temp. of 7˚CDB, 6˚CWB.
*1 : Indicates the value in an anechoic chamber. During operation these values are somewhat higher due to ambient conditions.
*2 : If a cooling operation is conducted when the outdoor air temperature is –5˚C or lower, the outdoor unit should be installed at a place where it is not influenced by natural wind. If wind blows, the low pressure will drop and compressor frequency will increase, this will cause the capacity to drop and may cause the unit to break down.

※ Powerful-Hi can be selected. Sound level: 40/50/60ZMXVF 47dB Air flow: 40/50/60ZMXVF 13.5m^3/min

DUCT CONNECTED -High Static pressure-

FDU

R410A

FDU 71/100/125/140

Remote control (Option)

Wired

RC-EX1A

RC-E5

RCH-E3

Wireless

RCN-KIT3-E

Enhanced installation workability

Quiet, Lightweight and Compact

With the FDU71, the noise level is only 25dB (low), weight is only 34kg and height is only 280mm.
In addition 600mm Drain Pump is mounted in FDU71/100/125/140.
The indoor unit is completely hidden in the ceiling, so this is suitable for spaces with classy interior decoration.

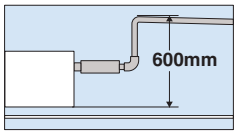

Dimensions (Unit:mm)

Model FDU71VF1

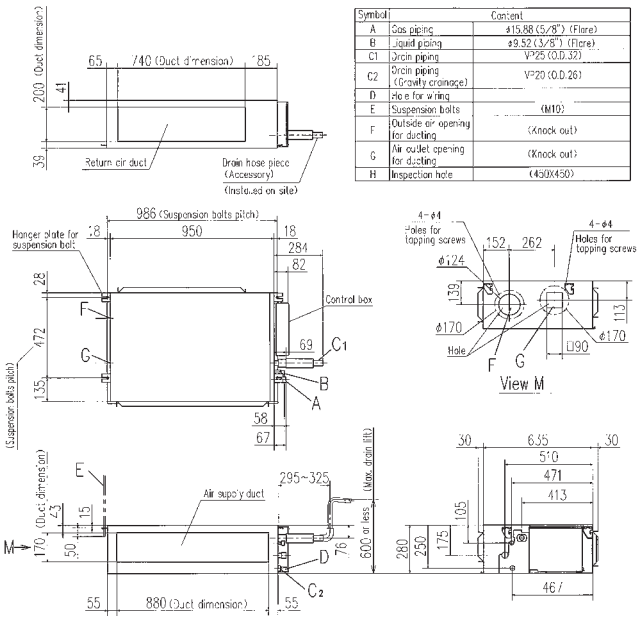

Symbol	Content	
A	Gas piping	φ15.88 (5/8") (Flare)
B	Liquid piping	φ9.52 (3/8") (Flare)
C1	Drain piping	VP25 (O.D.32)
C2	Drain piping (Gravity drainage)	VP20 (O.D.26)
D	Hole for wiring	
E	Suspension bolts	(M10)
F	Outside air opening for ducting	(Knock out)
G	Air outlet opening for ducting	(Knock out)
H	Inspection hole	(450X450)

Models FDU100VF1,125VF,140VF

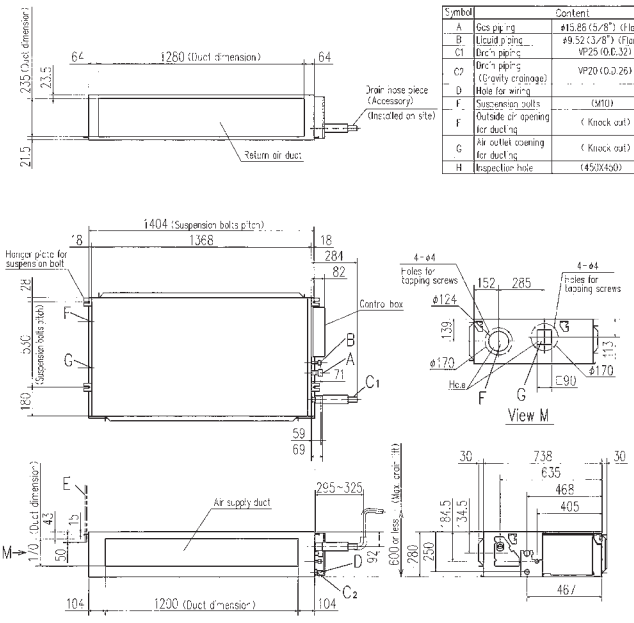

Symbol	Content	
A	Gas piping	φ15.88 (5/8") (Flare)
B	Liquid piping	φ9.52 (3/8") (Flare)
C1	Drain piping	VP25 (O.D.32)
C2	Drain piping (Gravity drainage)	VP20 (O.D.26)
D	Hole for wiring	
E	Suspension bolts	(M10)
F	Outside air opening for ducting	(Knock out)
G	Air outlet opening for ducting	(Knock out)
H	Inspection hole	(450X450)

Models FDU200,250VF (Micro inverter only, refer to P21)

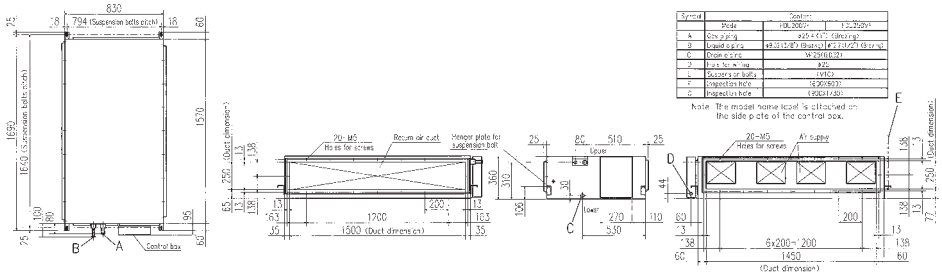

SPECIFICATIONS

				Hyper Inverter			
Set model name				FDU71VNXVF1	FDU100VNXVF1	FDU125VNXVF	FDU140VNXVF
Indoor unit				FDU71VF1	FDU100VF1	FDU125VF	FDU140VF
Outdoor unit				FDC71VNX	FDC100VNX	FDC125VNX	FDC140VNX
Power source				1 Phase 220-240V 50Hz, 1 Phase 220V 60Hz			
Nominal cooling capacity (Min~Max)			kW	7.1 (3.2 ~ 8.0)	10.0 (4.0 ~ 11.2)	12.5 (5.0 ~ 14.0)	14.0 (5.0 ~ 16.0)
Nominal heating capacity (Min~Max)			kW	8.0 (3.6 ~ 9.0)	11.2 (4.0 ~ 12.5)	14.0 (4.0 ~ 17.0)	16.0 (4.0 ~ 18.0)
Power consumption		Cooling/Heating	kW	2.05 / 2.01	2.68 / 3.02	3.49 / 3.77	4.28 / 4.42
EER/COP		Cooling/Heating		3.46 / 3.98	3.73 / 3.71	3.58 / 3.71	3.27 / 3.62
Inrush current		220/230/240 V	A	5	5	5	5
Max. running current				17	25	29	30
Sound power level*1	Indoor	Cooling/Heating	dB(A)	65 / 65	65 / 65	67 / 67	70 / 70
	Outdoor	Cooling/Heating		66 / 66	70 / 70	70 / 70	72 / 72
Sound pressure level*1 ※	Indoor	Cooling (Hi/Me/Lo)		33 / 29 / 25	38 / 36 / 30	40 / 34 / 29	40 / 35 / 30
		Heating (Hi/Me/Lo)		33 / 29 / 25	38 / 36 / 30	40 / 34 / 29	40 / 35 / 30
	Outdoor	Cooling/Heating		51 / 48	48 / 50	48 / 50	49 / 52
Air flow ※	Indoor	Cooling (Hi/Me/Lo)	m^3/min	19 / 15 / 10	28 / 25 / 19	32 / 26 / 20	35 / 28 / 22
		Heating (Hi/Me/Lo)		19 / 15 / 10	28 / 25 / 19	32 / 26 / 20	35 / 28 / 22
	Outdoor	Cooling/Heating		60 / 50	100 / 100	100 / 100	100 / 100
External static pressure*2			Pa	Standard:35 Max:200	Standard:60 Max:200		
Exterior dimensions	Indoor	HeightxWidthxDepth	mm	280 x 950 x 635	280 x 1,370 x 740		
	Outdoor			750 x 880(+88) x 340	1,300 x 970 x 370		
Net weight	Indoor		kg	34	54		
	Outdoor			60	105		
Ref.piping size	Liquid/Gas		ømm	9.52(3/8") / 15.88(5/8")			
Refrigerant line (one way) length			m	Max.50	Max.100		
Vertical height differences	Outdoor is higher/lower		m	Max.30 / Max.15			
Outdoor operating temperature range	Cooling		°C	-15~43*3			
	Heating			-20~20			
Air filter				Procure locally			
Remote control (option)				wired:RC-EX1A, RC-E5, RCH-E3 wireless:RCN-KIT3-E			

SPECIFICATIONS

				Hyper Inverter		
Set model name				FDU100VSXVF1	FDU125VSXVF	FDU140VSXVF
Indoor unit				FDU100VF1	FDU125VF	FDU140VF
Outdoor unit				FDC100VSX	FDC125VSX	FDC140VSX
Power source				3 Phase 380-415V 50Hz, 3 Phase 380V 60Hz		
Nominal cooling capacity (Min~Max)			kW	10.0 (4.0 ~ 11.2)	12.5 (5.0 ~ 14.0)	14.0 (5.0 ~ 16.0)
Nominal heating capacity (Min~Max)			kW	11.2 (4.0 ~ 16.0)	14.0 (4.0 ~ 18.0)	16.0 (4.0 ~ 20.0)
Power consumption		Cooling/Heating	kW	2.68 / 3.02	3.49 / 3.77	4.28 / 4.42
EER/COP		Cooling/Heating		3.73 / 3.71	3.58 / 3.71	3.27 / 3.62
Inrush current		220/230/240 V	A	5	5	5
Max. running current				16	18	19
Sound power level*1	Indoor	Cooling/Heating	dB(A)	65 / 65	67 / 67	70 / 70
	Outdoor	Cooling/Heating		70 / 70	70 / 70	72 / 72
Sound pressure level*1 ※	Indoor	Cooling (Hi/Me/Lo)		38 / 36 / 30	40 / 34 / 29	40 / 35 / 30
		Heating (Hi/Me/Lo)		38 / 36 / 30	40 / 34 / 29	40 / 35 / 30
	Outdoor	Cooling/Heating		48 / 50	48 / 50	49 / 52
Air flow ※	Indoor	Cooling (Hi/Me/Lo)	m^3/min	28 / 25 / 19	32 / 26 / 20	35 / 28 / 22
		Heating (Hi/Me/Lo)		28 / 25 / 19	32 / 26 / 20	35 / 28 / 22
	Outdoor	Cooling/Heating		100 / 100	100 / 100	100 / 100
External static pressure*2			Pa	Standard:60 Max:200		
Exterior dimensions	Indoor	HeightxWidthxDepth	mm	280 x 1,370 x 740		
	Outdoor			1,300 x 970 x 370		
Net weight	Indoor		kg	54		
	Outdoor			105		
Ref.piping size	Liquid/Gas		ømm	9.52(3/8") / 15.88(5/8")		
Refrigerant line (one way) length			m	Max.100		
Vertical height differences	Outdoor is higher/lower		m	Max.30 / Max.15		
Outdoor operating temperature range	Cooling		°C	-15~43*3		
	Heating			-20~20		
Air filter				Procure locally		
Remote control (option)				wired:RC-EX1A, RC-E5, RCH-E3 wireless:RCN-KIT3-E		

The data are measured under the following conditions(ISO-T1).
Cooling:Indoor temp. of 27˚CDB, 19˚CWB, and outdoor temp. of 35˚CDB. Heating:Indoor temp. of 20˚CDB, and outdoor temp. of 7˚CDB, 6˚CWB.
External static pressure is 35Pa(71), 60Pa (100/125/140).

*1 : Indicates the value in an anechoic chamber. During operation these values are somewhat higher due to ambient conditions.

*2 : External static pressure is changeable to be set by the remote control. MAX external static pressure is "High static pressure" setting. The values of sound pressure level become 5dB(A) higher at external static pressure of 200Pa.

*3 : If a cooling operation is conducted when the outdoor air temperature is –5˚C or lower, the outdoor unit should be installed at a place where it is not influenced by natural wind. If wind blows, the low pressure will drop and compressor frequency will increase, this will cause the capacity to drop and may cause the unit to break down.

※ Powerful-Hi can be selected. Sound level: 71VNXVF1 38dB, 100VN(S)XVF1 44dB, 125VN(S)XVF 45dB, 140VN(S)XVF 47dB
Air flow: 71VNXVF1 24m^3/min, 100VN(S)XVF1 36m^3/min, 125VN(S)XVF 39m^3/min, 140VN(S)XVF 48m^3/min

DUCT CONNECTED -Middle Static pressure-

FDUM

R410A

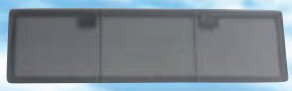

Filter kit (option)
UM-FL1EF : for 40, 50
UM-FL2EF : for 60, 71
UM-FL3EF : for 100, 125, 140
external static pressure loss:5Pa

FDUM 40/50/60/71/ 100/125/140

Remote control (Option)

Wired: **RC-EX1A** **RC-E5** **RCH-E3**
Wireless: **RCN-KIT3-E**

Automatic external static pressure (E.S.P.) control

Duck design was simplified.
Using DC motor, the most optimum air flow volume can be achieved by this automatic control.
Indoor unit will recognize external static pressure by itself automatically and keep rated air flow volume.

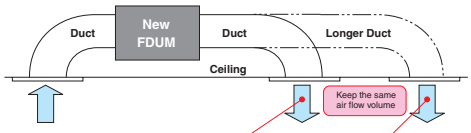

Setting No.	No.1	No.2	No.3	No.4	No.5	No.6	No.7	No.8	No.9	No.10
E.S.P.	10Pa	20Pa	30Pa	40Pa	50Pa	60Pa	70Pa	80Pa	90Pa	100Pa

RC-E5

E.S.P. button

External Static Pressure (E.S.P.) can be set by E.S.P. button.

Dimensions (Unit:mm)

Model FDUM40VF, FDUM50VF

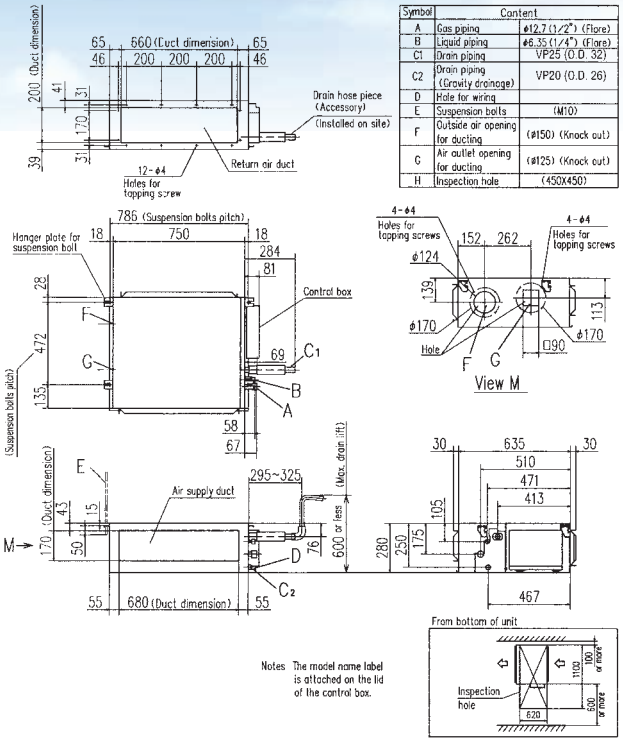

Symbol	Content	
A	Gas piping	φ12.7 (1/2") (Flare)
B	Liquid piping	φ6.35 (1/4") (Flare)
C1	Drain piping	VP25 (O.D. 32)
C2	Drain piping (Gravity drainage)	VP20 (O.D. 26)
D	Hole for wiring	
E	Suspension bolts	(M10)
F	Outside air opening for ducting	(φ150) (Knock out)
G	Air outlet opening for ducting	(φ125) (Knock out)
H	Inspection hole	(450X450)

Notes The model name label is attached on the lid of the control box.

Models FDUM60VF,71VF1

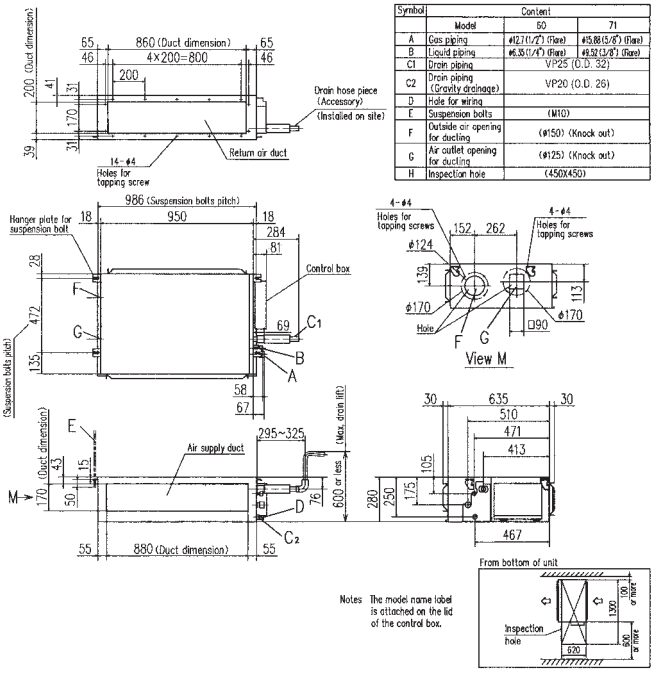

Symbol	Content		
	Model	60	71
A	Gas piping	φ12.7 (1/2") (Flare)	φ15.88 (5/8") (Flare)
B	Liquid piping	φ6.35 (1/4") (Flare)	φ9.52 (3/8") (Flare)
C1	Drain piping	VP25 (O.D. 32)	
C2	Drain piping (Gravity drainage)	VP20 (O.D. 26)	
D	Hole for wiring		
E	Suspension bolts	(M10)	
F	Outside air opening for ducting	(φ150) (Knock out)	
G	Air outlet opening for ducting	(φ125) (Knock out)	
H	Inspection hole	(450X450)	

Notes The model name label is attached on the lid of the control box.

Models FDUM100VF1,125VF,140VF

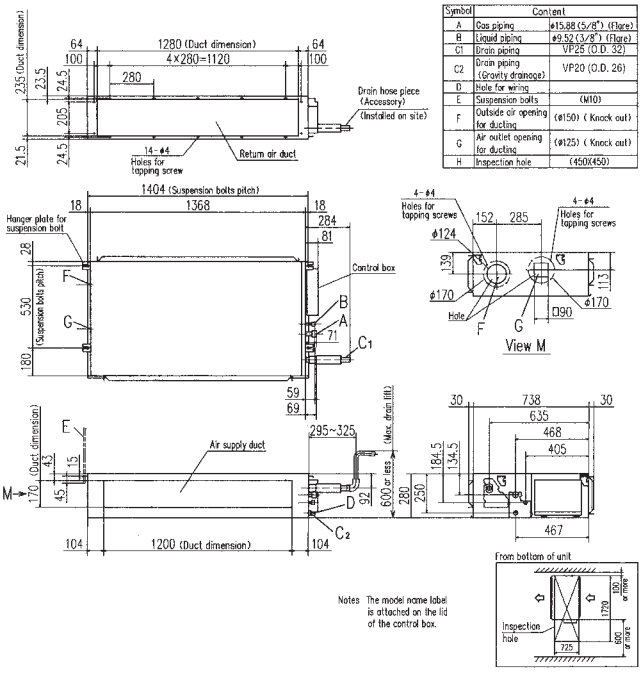

Symbol	Content	
A	Gas piping	φ15.88 (5/8") (Flare)
B	Liquid piping	φ9.52 (3/8") (Flare)
C1	Drain piping	VP25 (O.D. 32)
C2	Drain piping (Gravity drainage)	VP20 (O.D. 26)
D	Hole for wiring	
E	Suspension bolts	(M10)
F	Outside air opening for ducting	(φ150) (Knock out)
G	Air outlet opening for ducting	(φ125) (Knock out)
H	Inspection hole	(450X450)

Notes The model name label is attached on the lid of the control box.

Round duct adapter

In case of requirements of round duct adapter, please access the followings for details.

Company : AIRZONE
e-mail : jmoral@altracorporacion.es
tel : +34-902-400-445

SPECIFICATIONS

				Hyper Inverter				
Set model name				FDUM40ZMXVF	FDUM50ZMXVF	FDUM60ZMXVF	FDUM71VNXVF1	FDUM100VNXVF1
Indoor unit				FDUM40VF	FDUM50VF	FDUM60VF	FDUM71VF1	FDUM100VF1
Outdoor unit				SRC40ZMX-S	SRC50ZMX-S	SRC60ZMX-S	FDC71VNX	FDC100VNX
Power source				1 Phase 220-240V 50Hz, 1 Phase 220V 60Hz				
Nominal cooling capacity (Min~Max)			kW	4.0 (1.1 ~ 4.7)	5.0 (1.1 ~ 5.6)	5.6 (1.1 ~ 6.3)	7.1 (3.2 ~ 8.0)	10.0 (4.0 ~ 11.2)
Nominal heating capacity (Min~Max)			kW	4.5 (0.6 ~ 5.4)	5.4 (0.6 ~ 6.3)	6.7 (0.6 ~ 7.1)	8.0 (3.6 ~ 9.0)	11.2 (4.0 ~ 12.5)
Power consumption		Cooling/Heating	kW	0.952 / 1.07	1.38 / 1.45	1.54 / 1.75	2.03 / 1.99	2.68 / 3.02
EER/COP		Cooling/Heating		4.20 / 4.21	3.62 / 3.72	3.64 / 3.83	3.50 / 4.02	3.73 / 3.71
Inrush current		220/230/240 V	A	5	5	5	5	5
Max. running current				12	15	15	17	24
Sound power level*1	Indoor	Cooling/Heating	dB(A)	60 / 60	60 / 60	60 / 60	65 / 65	65 / 65
	Outdoor	Cooling/Heating		63 / 63	63 / 63	64 / 64	66 / 66	70 / 70
Sound pressure level*1 ※	Indoor	Cooling (Hi/Me/Lo)	dB(A)	32 / 29 / 26	32 / 29 / 26	31 / 28 / 25	33 / 29 / 25	38 / 36 / 30
		Heating (Hi/Me/Lo)		32 / 29 / 26	32 / 29 / 26	31 / 28 / 25	33 / 29 / 25	38 / 36 / 30
	Outdoor	Cooling/Heating		50 / 50	54 / 50	54 / 54	51 / 48	48 / 50
Air flow ※	Indoor	Cooling (Hi/Me/Lo)	m^3/min	10 / 9 / 8	10 / 9 / 8	15 / 13 / 10	19 / 15 / 10	28 / 25 / 19
		Heating (Hi/Me/Lo)		10 / 9 / 8	10 / 9 / 8	15 / 13 / 10	19 / 15 / 10	28 / 25 / 19
	Outdoor	Cooling/Heating		36 / 33	40 / 33	41.5 / 39	60 / 50	100 / 100
External static pressure*2			Pa	Standard:35 Max:100				Standard:60 Max:100
Exterior dimensions	Indoor	HeightxWidthxDepth	mm	280 x 750 x 635		280 x 950 x 635		280 x 1,370 x 740
	Outdoor			640 x 800(+71) x 290			750 x 880(+88) x 340	1,300 x 970 x 370
Net weight	Indoor		kg	29		34		54
	Outdoor			45			60	105
Ref.piping size	Liquid/Gas		ømm	6.35(1/4") / 12.7(1/2")			9.52(3/8") / 15.88(5/8")	
Refrigerant line (one way) length			m	Max.30			Max.50	Max.100
Vertical height differences	Outdoor is higher/lower		m	Max.20 / Max.20			Max.30 / Max.15	
Outdoor operating temperature range	Cooling		°C	-15~43*3				
	Heating			-15~20			-20~20	
Air filter				Filter kit : UM-FL1EF/UM-FL2EF/UM-FL3EF (option)				
Remote control (option)				wired:RC-EX1A, RC-E5, RCH-E3 wireless:RCN-KIT3-E				

SPECIFICATIONS

				Hyper Inverter				
Set model name				FDUM125VNXVF	FDUM140VNXVF	FDUM100VSXVF1	FDUM125VSXVF	FDUM140VSXVF
Indoor unit				FDUM125VF	FDUM140VF	FDUM100VF1	FDUM125VF	FDUM140VF
Outdoor unit				FDC125VNX	FDC140VNX	FDC100VSX	FDC125VSX	FDC140VSX
Power source				1 Phase 220-240V 50Hz, 1 Phase 220V 60Hz		3 Phase 380-415V 50Hz, 3Phase 380V 60Hz		
Nominal cooling capacity (Min~Max)			kW	12.5 (5.0 ~ 14.0)	14.0 (5.0 ~ 16.0)	10.0 (4.0 ~ 11.2)	12.5 (5.0 ~ 14.0)	14.0 (5.0 ~ 16.0)
Nominal heating capacity (Min~Max)			kW	14.0 (4.0 ~ 17.0)	16.0 (4.0 ~ 18.0)	11.2 (4.0 ~ 16.0)	14.0 (4.0 ~ 18.0)	16.0 (4.0 ~ 20.0)
Power consumption		Cooling/Heating	kW	3.49 / 3.77	4.28 / 4.42	2.68 / 3.02	3.49 / 3.77	4.28 / 4.42
EER/COP		Cooling/Heating		3.58 / 3.71	3.27 / 3.62	3.73 / 3.71	3.58 / 3.71	3.27 / 3.62
Inrush current		220/230/240 V	A	5	5	5	5	5
Max. running current				26	26	15	15	15
Sound power level*1	Indoor	Cooling/Heating	dB(A)	67 / 67	70 / 70	65 / 65	67 / 67	70 / 70
	Outdoor	Cooling/Heating		70 / 70	72 / 72	70 / 70	70 / 70	72 / 72
Sound pressure level*1 ※	Indoor	Cooling (Hi/Me/Lo)	dB(A)	40 / 34 / 29	40 / 35 / 30	38 / 36 / 30	40 / 34 / 29	40 / 35 / 30
		Heating (Hi/Me/Lo)		40 / 34 / 29	40 / 35 / 30	38 / 36 / 30	40 / 34 / 29	40 / 35 / 30
	Outdoor	Cooling/Heating		48 / 50	49 / 52	48 / 50	48 / 50	49 / 52
Air flow ※	Indoor	Cooling (Hi/Me/Lo)	m^3/min	32 / 26 / 20	35 / 28 / 22	28 / 25 / 19	32 / 26 / 20	35 / 28 / 22
		Heating (Hi/Me/Lo)		32 / 26 / 20	35 / 28 / 22	28 / 25 / 19	32 / 26 / 20	35 / 28 / 22
	Outdoor	Cooling/Heating		100 / 100	100 / 100	100 / 100	100 / 100	100 / 100
External static pressure*2			Pa	Standard:60 Max:100				
Exterior dimensions	Indoor	HeightxWidthxDepth	mm	280 x 1,370 x 740				
	Outdoor			1,300 x 970 x 370				
Net weight	Indoor		kg	54				
	Outdoor			105				
Ref.piping size	Liquid/Gas		ømm	9.52(3/8") / 15.88(5/8")				
Refrigerant line (one way) length			m	Max.100				
Vertical height differences	Outdoor is higher/lower		m	Max.30 / Max.15				
Outdoor operating temperature range	Cooling		°C	-15~43*3				
	Heating			-20~20				
Air filter				Filter kit : UM-FL3EF (option)				
Remote control (option)				wired:RC-EX1A, RC-E5, RCH-E3 wireless:RCN-KIT3-E				

The data are measured under the following conditions(ISO-T1).
Cooling:Indoor temp. of 27˚CDB, 19˚CWB, and outdoor temp. of 35˚CDB. Heating:Indoor temp. of 20˚CDB, and outdoor temp. of 7˚CDB, 6˚CWB.
External static pressure is 35Pa (40/50/60/71), 60Pa (100/125/140).

*1 : Indicates the value in an anechoic chamber. During operation these values are somewhat higher due to ambient conditions.

*2 : External static pressure is changeable to be set by the remote control. MAX external static pressure is "High static pressure" setting. The values of sound pressure level become 5dB(A) higher at external static pressure of 100Pa.

*3 : If a cooling operation is conducted when the outdoor air temperature is –5˚C or lower, the outdoor unit should be installed at a place where it is not influenced by natural wind. If wind blows, the low pressure will drop and compressor frequency will increase, this will cause the capacity to drop and may cause the unit to break down.

※ Powerful-Hi can be selected. Sound level: 40ZMXVF/50ZMXVF 37dB, 60ZMXVF 36dB, 71VNXVF1 38dB, 100VN(S)XVF1 44dB, 125VN(S)XVF 45dB, 140VN(S)XVF 47dB
Air flow: 40ZMXVF/50ZMXVF 13m^3/min, 60ZMXVF 20m^3/min, 71VNXVF1 24m^3/min, 100VN(S)XVF1 36m^3/min, 125VN(S)XVF 39m^3/min, 140VN(S)XVF 48m^3/min

CEILING SUSPENDED

FDEN

R410A

FDEN 40/50/60/71/100/125/140

Remote control (Option)

Wired

RC-EX1A

RC-E5

RCH-E3

Wireless

RCN-E1R

Point 1 Improved installation workability

Increased freedom of a piping layout

The refrigerant pipe from the unit can be arranged in three directions, rear, right and up. The drain pipe can be arranged in two directions, left and right. This will allow a free layout of piping for various installation conditions. The unit can only be serviced from the bottom.

Point 2 Compact and modern design

All models fit compactly on ceiling. (Height-210mm or 250mm). Plain, modern design featuring rounded edges gives room a comfortable atmosphere.
FDEN40VF, 50VF weights 30kg the lightest level in the industry. Convenient and quick installation.

Dimensions (Unit:mm)

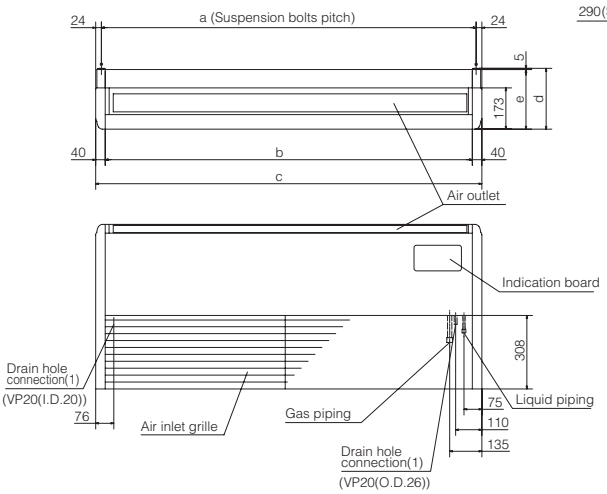

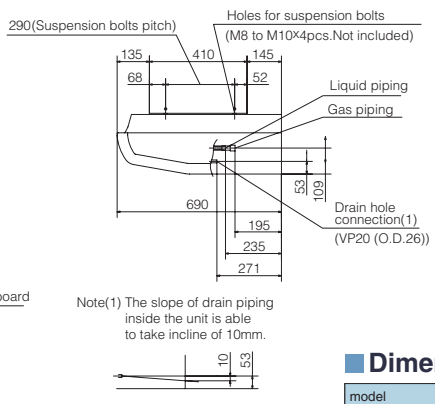

Note(1) The slope of drain piping inside the unit is able to take incline of 10mm.

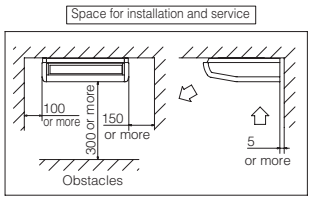

Dimension Table

model	a	b	c	d	e
FDEN40,50	1022	990	1070	215	210
FDEN60,71	1272	1240	1320	215	210
FDEN100~140	1572	1540	1620	255	250

SPECIFICATIONS

				Hyper Inverter				
Set model name				FDEN40ZMXVF	FDEN50ZMXVF	FDEN60ZMXVF	FDEN71VNXVF1	FDEN100VNXVF1
Indoor unit				FDEN40VF	FDEN50VF	FDEN60VF	FDEN71VF1	FDEN100VF1
Outdoor unit				SRC40ZMX-S	SRC50ZMX-S	SRC60ZMX-S	FDC71VNX	FDC100VNX
Power source				1 Phase 220-240V 50Hz, 1 Phase 220V 60Hz				
Nominal cooling capacity (Min~Max)			kW	4.0 (1.1 ~ 4.7)	5.0 (1.1 ~ 5.6)	5.6 (1.1 ~ 6.3)	7.1 (3.2 ~ 8.0)	10.0 (4.0 ~ 11.2)
Nominal heating capacity (Min~Max)			kW	4.5 (0.6 ~ 5.4)	5.4 (0.6 ~ 6.3)	6.7 (0.6 ~ 7.1)	8.0 (3.6 ~ 9.0)	11.2 (4.0 ~ 12.5)
Power consumption		Cooling/Heating	kW	1.02 / 1.10	1.53 / 1.46	1.78 / 1.87	2.11 / 2.11	2.80 / 2.88
EER/COP		Cooling/Heating		3.92 / 4.09	3.27 / 3.70	3.15 / 3.58	3.36 / 3.79	3.57 / 3.89
Inrush current		220/230/240 V	A	5	5	5	5	5
Max. running current				12	15	15	17	24
Sound power level*1	Indoor	Cooling/Heating	dB(A)	60 / 60	60 / 60	60 / 60	62 / 62	64 / 64
	Outdoor	Cooling/Heating		63 / 63	63 / 63	64 / 64	66 / 66	70 / 70
Sound pressure level*1 ※	Indoor	Cooling (Hi/Me/Lo)	dB(A)	39 / 38 / 37	39 / 38 / 37	41 / 39 / 38	41 / 39 / 38	44 / 41 / 39
		Heating (Hi/Me/Lo)		39 / 38 / 37	39 / 38 / 37	41 / 39 / 38	41 / 39 / 38	44 / 41 / 39
	Outdoor	Cooling/Heating		50 / 50	54 / 50	54 / 54	51 / 48	48 / 50
Air flow ※	Indoor	Cooling (Hi/Me/Lo)	m^3/min	10 / 9 / 7	10 / 9 / 7	16 / 14 / 12	16 / 14 / 12	26 / 23 / 21
		Heating (Hi/Me/Lo)		10 / 9 / 7	10 / 9 / 7	16 / 14 / 12	16 / 14 / 12	26 / 23 / 21
	Outdoor	Cooling/Heating		36 / 33	40 / 33	41.5 / 39	60 / 50	100 / 100
Exterior dimensions	Indoor	HeightxWidthxDepth	mm	210 x 1,070 x 690		210 x 1,320 x 690		250 x 1,620 x 690
	Outdoor			640 x 800(+71) x 290			750 x 880(+88) x 340	1,300 x 970 x 370
Net weight	Indoor		kg	28		37	37	49
	Outdoor			45			60	105
Ref.piping size	Liquid/Gas		ømm	6.35(1/4") / 12.7(1/2")			9.52(3/8") / 15.88(5/8")	
Refrigerant line (one way) length			m	Max.30			Max.50	Max.100
Vertical height differences	Outdoor is higher/lower		m	Max.20 / Max.20			Max.30 / Max.15	
Outdoor operating temperature range	Cooling		℃	-15~43*2				
	Heating			-15~20			-20~20	
Air filter, Q'ty				Pocket Plastic net x2(Washable)				
Remote control (option)				wired:RC-EX1A, RC-E5, RCH-E3 wireless:RCN-E1R				

SPECIFICATIONS

				Hyper Inverter				
Set model name				FDEN125VNXVF	FDEN140VNXVF	FDEN100VSXVF1	FDEN125VSXVF	FDEN140VSXVF
Indoor unit				FDEN125VF	FDEN140VF	FDEN100VF1	FDEN125VF	FDEN140VF
Outdoor unit				FDC125VNX	FDC140VNX	FDC100VSX	FDC125VSX	FDC140VSX
Power source				1 Phase 220-240V 50Hz, 1 Phase 220V 60Hz		3 Phase 380-415V 50Hz, 3Phase 380V 60Hz		
Nominal cooling capacity (Min~Max)			kW	12.5 (5.0 ~ 14.0)	14.0 (5.0 ~ 16.0)	10.0 (4.0 ~ 11.2)	12.5 (5.0 ~ 14.0)	14.0 (5.0 ~ 16.0)
Nominal heating capacity (Min~Max)			kW	14.0 (4.0 ~ 17.0)	16.0 (4.0 ~ 18.0)	11.2 (4.0 ~ 16.0)	14.0 (4.0 ~ 18.0)	16.0 (4.0 ~ 20.0)
Power consumption		Cooling/Heating	kW	3.86 / 3.77	4.98 / 4.69	2.80 / 2.88	3.86 / 3.77	4.98 / 4.69
EER/COP		Cooling/Heating		3.24 / 3.71	2.81 / 3.41	3.57 / 3.89	3.24 / 3.71	2.81 / 3.41
Inrush current		220/230/240 V	A	5	5	5	5	5
Max. running current				26	26	15	15	15
Sound power level*1	Indoor	Cooling/Heating	dB(A)	67 / 67	67 / 67	64 / 64	67 / 67	67 / 67
	Outdoor	Cooling/Heating		70 / 70	72 / 72	70 / 70	70 / 70	72 / 72
Sound pressure level*1 ※	Indoor	Cooling (Hi/Me/Lo)	dB(A)	46 / 44 / 43	46 / 44 / 43	44 / 41 / 39	46 / 44 / 43	46 / 44 / 43
		Heating (Hi/Me/Lo)		46 / 44 / 43	46 / 44 / 43	44 / 41 / 39	46 / 44 / 43	46 / 44 / 43
	Outdoor	Cooling/Heating		48 / 50	49 / 52	48 / 50	48 / 50	49 / 52
Air flow ※	Indoor	Cooling (Hi/Me/Lo)	m^3/min	29 / 26 / 23	29 / 26 / 23	26 / 23 / 21	29 / 26 / 23	29 / 26 / 23
		Heating (Hi/Me/Lo)		29 / 26 / 23	29 / 26 / 23	26 / 23 / 21	29 / 26 / 23	29 / 26 / 23
	Outdoor	Cooling/Heating		100 / 100	100 / 100	100 / 100	100 / 100	100 / 100
Exterior dimensions	Indoor	HeightxWidthxDepth	mm	250 x 1,620 x 690				
	Outdoor			1,300 x 970 x 370				
Net weight	Indoor		kg	49				
	Outdoor			105				
Ref.piping size	Liquid/Gas		ømm	9.52(3/8") / 15.88(5/8")				
Refrigerant line (one way) length			m	Max.100				
Vertical height differences	Outdoor is higher/lower		m	Max.30 / Max.15				
Outdoor operating temperature range	Cooling		℃	-15~43*2				
	Heating			-20~20				
Air filter, Q'ty				Pocket Plastic net x2(Washable)				
Remote control (option)				wired:RC-EX1A, RC-E5, RCH-E3 wireless:RCN-E1R				

The data are measured under the following conditions(ISO-T1).
Cooling:Indoor temp. of 27˚CDB, 19˚CWB, and outdoor temp. of 35˚CDB. Heating:Indoor temp. of 20˚CDB, and outdoor temp. of 7˚CDB, 6˚CWB.
*1 : Indicates the value in an anechoic chamber. During operation these values are somewhat higher due to ambient conditions.
*2 : If a cooling operation is conducted when the outdoor air temperature is –5˚C or lower, the outdoor unit should be installed at a place where it is not influenced by natural wind. If wind blows, the low pressure will drop and compressor frequency will increase, this will cause the capacity to drop and may cause the unit to break down.

※ Powerful-Hi can be selected. Sound level: 40/50ZMXVF 46dB, 60ZMXVF 48dB, 71VNXVF1 50dB, 100VN(S)XVF1 46dB, 125/140VN(S)XVF 50dB
Air flow: 40/50ZMXVF 11m^3/min, 60ZMXVF 20m^3/min, 71VNXVF1 20m^3/min, 100VN(S)XVF1 28m^3/min, 125/140VN(S)XVF 32m^3/min

FLOOR STANDING
FDF

R410A

FDF 71/100/125/140

Wireless remote control (Option)

RCN-KIT3-E

Point 1 Wide and powerful air flow

Wide and powerful air flow increase your comfort, realizing high efficiency in combination with our highly advanced outdoor units.

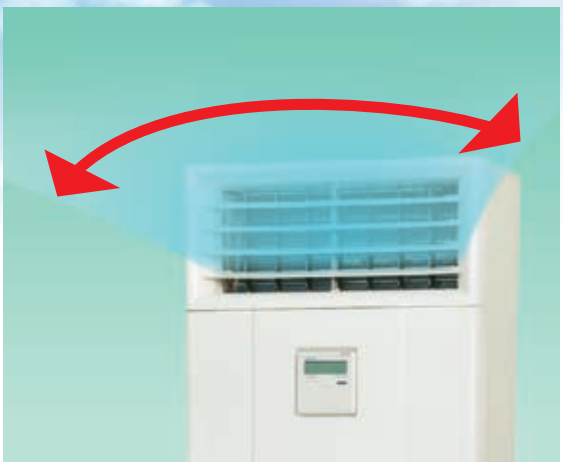

Point 2 Easy Transportation and Installation workability

Piping and drain hose connection can be selected out of 4-directions and the selection makes installation workability more effective.
Due to slim design (Depth: 320mm), easy transportation and installation are realized.

Easy Maintenance

The surface of heat exchanger can be appeared only removing the front panel. Easy cleaning of heat exchanger is possible.

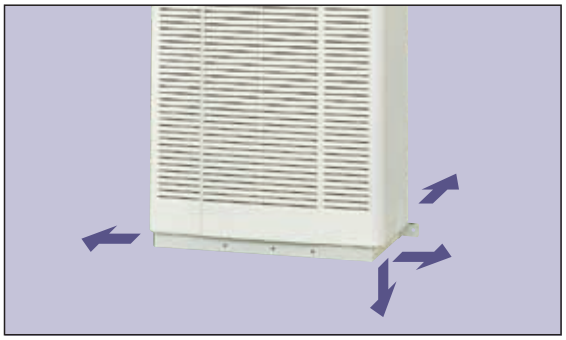

Dimensions (Unit:mm)

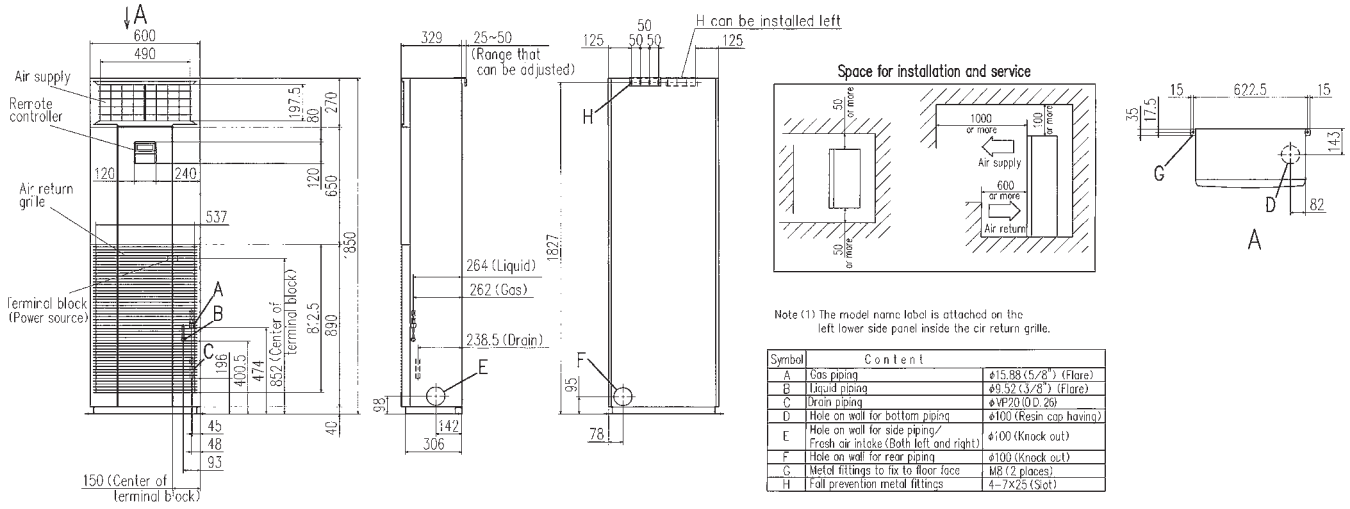

Note (1) The model name label is attached on the left lower side panel inside the air return grille.

Symbol	Content	
A	Gas piping	ϕ15.88 (5/8") (Flare)
B	Liquid piping	ϕ9.52 (3/8") (Flare)
C	Drain piping	ϕVP20 (O.D. 26)
D	Hole on wall for bottom piping	ϕ100 (Resin cap having)
E	Hole on wall for side piping/ Fresh air intake (Both left and right)	ϕ100 (Knock out)
F	Hole on wall for rear piping	ϕ100 (Knock out)
G	Metal fittings to fix to floor face	M8 (2 places)
H	Fall prevention metal fittings	4-7X25 (Slot)

SPECIFICATIONS

				Hyper Inverter			
Set model name				FDF71VNXVD1	FDF100VNXVD1	FDF125VNXVD	FDF140VNXVD
Indoor unit				FDF71VD1	FDF100VD1	FDF125VD	FDF140VD
Outdoor unit				FDC71VNX	FDC100VNX	FDC125VNX	FDC140VNX
Power source				1 Phase 220-240V 50Hz, 1 Phase 220V 60Hz			
Nominal cooling capacity (Min~Max)			kW	7.1 (3.2 ~ 8.0)	10.0 (4.0 ~ 11.2)	12.5 (5.0 ~ 14.0)	14.0 (5.0 ~ 16.0)
Nominal heating capacity (Min~Max)			kW	8.0 (3.6 ~ 9.0)	11.2 (4.0 ~ 12.5)	14.0 (4.0 ~ 17.0)	16.0 (4.0 ~ 18.0)
Power consumption		Cooling/Heating	kW	2.21 / 2.21	2.83 / 3.04	3.89 / 3.88	4.65 / 4.69
EER/COP		Cooling/Heating		3.21 / 3.62	3.53 / 3.68	3.21 / 3.61	3.01 / 3.41
Inrush current		220/230/240 V	A	5	5	5	5
Max. running current				17	24	26	26
Sound power level*1	Indoor	Cooling/Heating	dB(A)	61 / 61	65 / 65	73 / 73	73 / 73
	Outdoor	Cooling/Heating		66 / 66	70 / 70	70 / 70	72 / 72
Sound pressure level*1 ※	Indoor	Cooling (Hi/Me/Lo)		39 / 35 / 33	50 / 48 / 44	50 / 48 / 44	50 / 48 / 44
		Heating (Hi/Me/Lo)		39 / 35 / 33	50 / 48 / 44	50 / 48 / 44	50 / 48 / 44
	Outdoor	Cooling/Heating		51 / 48	48 / 50	48 / 50	49 / 52
Air flow ※	Indoor	Cooling (Hi/Me/Lo)	m^3/min	18 / 16 / 14	26 / 23 / 19	26 / 23 / 19	26 / 23 / 19
		Heating (Hi/Me/Lo)		18 / 16 / 14	26 / 23 / 19	26 / 23 / 19	26 / 23 / 19
	Outdoor	Cooling/Heating		60 / 50	100 / 100	100 / 100	100 / 100
Exterior dimensions	Indoor	HeightxWidthxDepth	mm	1,850 x 600 x 320			
	Outdoor			750 x 880(+88) x 340	1,300 x 970 x 370		
Net weight	Indoor		kg	49	52		
	Outdoor			60	105		
Ref.piping size	Liquid/Gas		ømm	9.52(3/8") / 15.88(5/8")			
Refrigerant line (one way) length			m	Max.50	Max.100		
Vertical height differences	Outdoor is higher/lower		m	Max.30 / Max.15			
Outdoor operating temperature range	Cooling		℃	-15~43*2			
	Heating			-20~20			
Air filter, Q'ty				Plastic net x 1(washable)			
Remote control				wired:RC-E5 (installed) wireless:RCN-KIT3-E(option)			

SPECIFICATIONS

				Hyper Inverter		
Set model name				FDF100VSXVD1	FDF125VSXVD	FDF140VSXVD
Indoor unit				FDF100VD1	FDF125VD	FDF140VD
Outdoor unit				FDC100VSX	FDC125VSX	FDC140VSX
Power source				3 Phase 380-415V 50Hz, 3Phase 380V 60Hz		
Nominal cooling capacity (Min~Max)			kW	10.0 (4.0 ~ 11.2)	12.5 (5.0 ~ 14.0)	14.0 (5.0 ~ 16.0)
Nominal heating capacity (Min~Max)			kW	11.2 (4.0 ~ 16.0)	14.0 (4.0 ~ 18.0)	16.0 (4.0 ~ 20.0)
Power consumption		Cooling/Heating	kW	2.83 / 3.04	3.89 / 3.88	4.65 / 4.69
EER/COP		Cooling/Heating		3.53 / 3.68	3.21 / 3.61	3.01 / 3.41
Inrush current		220/230/240 V	A	5	5	5
Max. running current				15	15	15
Sound power level*1	Indoor	Cooling/Heating	dB(A)	65 / 65	73 / 73	73 / 73
	Outdoor	Cooling/Heating		70 / 70	70 / 70	72 / 72
Sound pressure level*1 ※	Indoor	Cooling (Hi/Me/Lo)		50 / 48 / 44	50 / 48 / 44	50 / 48 / 44
		Heating (Hi/Me/Lo)		50 / 48 / 44	50 / 48 / 44	50 / 48 / 44
	Outdoor	Cooling/Heating		48 / 50	48 / 50	49 / 52
Air flow ※	Indoor	Cooling (Hi/Me/Lo)	m^3/min	26 / 23 / 19	26 / 23 / 19	26 / 23 / 19
		Heating (Hi/Me/Lo)		26 / 23 / 19	26 / 23 / 19	26 / 23 / 19
	Outdoor	Cooling/Heating		100 / 100	100 / 100	100 / 100
Exterior dimensions	Indoor	HeightxWidthxDepth	mm	1,850 x 600 x 320		
	Outdoor			1,300 x 970 x 370		
Net weight	Indoor		kg	52		
	Outdoor			105		
Ref.piping size	Liquid/Gas		ømm	9.52(3/8") / 15.88(5/8")		
Refrigerant line (one way) length			m	Max.100		
Vertical height differences	Outdoor is higher/lower		m	Max.30 / Max.15		
Outdoor operating temperature range	Cooling		℃	-15~43*2		
	Heating			-20~20		
Air filter, Q'ty				Plastic net x 1(washable)		
Remote control				wired:RC-E5 (installed) wireless:RCN-KIT3-E(option)		

The data are measured under the following conditions(ISO-T1).
Cooling:Indoor temp. of 27˚CDB, 19˚CWB, and outdoor temp. of 35˚CDB. Heating:Indoor temp. of 20˚CDB, and outdoor temp. of 7˚CDB, 6˚CWB.
*1 : Indicates the value in an anechoic chamber. During operation these values are somewhat higher due to ambient conditions.
*2 : If a cooling operation is conducted when the outdoor air temperature is –5˚C or lower, the outdoor unit should be installed at a place where it is not influenced by natural wind. If wind blows, the low pressure will drop and compressor frequency will increase, this will cause the capacity to drop and may cause the unit to break down.

※ Powerful-Hi can be selected. Sound level:71VNXVD1 42dB, 100VN(S)XVD1 54dB, 125/140VN(S)XVD 54dB
Air flow: 71VNXVD1 20m^3/min, 100VN(S)XVD1 29m^3/min, 125/140VN(S)XVD 29m^3/min

CEILING CASSETTE -4way-

FDT

R410A

FDT 100/125/140

Remote control (Option)

Wired

RC-EX1A

RC-E5

RCH-E3

Wireless

RCN-T-36W-E

Dimensions : refer to page 8

SPECIFICATIONS

				Micro Inverter					
Set model name				FDT100VNVF1	FDT125VNVF	FDT140VNVF	FDT100VSVF1	FDT125VSVF	FDT140VSVF
Indoor unit				FDT100VF1	FDT125VF	FDT140VF	FDT100VF1	FDT125VF	FDT140VF
Outdoor unit				FDC100VN	FDC125VN	FDC140VN	FDC100VS	FDC125VS	FDC140VS
Power source				1 Phase 220-240V 50Hz, 1 Phase 220V 60Hz			3 Phase 380-415V 50Hz, 3 Phase 380V 60Hz		
Nominal cooling capacity (Min~Max)			kW	10.0 (4.0 ~ 11.2)	12.5 (5.0 ~ 14.0)	14.0 (5.0 ~ 14.5)	10.0 (4.0 ~ 11.2)	12.5 (5.0 ~ 14.0)	14.0 (5.0 ~ 14.5)
Nominal heating capacity (Min~Max)			kW	11.2 (4.0 ~ 12.5)	14.0 (4.0 ~ 16.0)	16.0 (4.0 ~ 16.5)	11.2 (4.0 ~ 12.5)	14.0 (4.0 ~ 16.0)	16.0 (4.0 ~ 16.5)
Power consumption		Cooling/Heating	kW	2.76 / 2.74	4.05 / 3.77	4.98 / 4.57	2.76 / 2.74	4.05 / 3.77	4.98 / 4.57
EER/COP		Cooling/Heating		3.62 / 4.09	3.09 / 3.71	2.81 / 3.50	3.62 / 4.09	3.09 / 3.71	2.81 / 3.50
Inrush current		220/230/240 V	A	5	5	5	5	5	5
Max. running current				24	24	24	15	15	15
Sound power level*1	Indoor	Cooling/Heating	dB(A)	65 / 65	68 / 68	68 / 68	65 / 65	68 / 68	68 / 68
	Outdoor	Cooling/Heating		70 / 70	72 / 72	73 / 73	70 / 70	72 / 72	73 / 73
Sound pressure level*1 ※	Indoor	Cooling (Hi/Me/Lo)		40 / 37 / 35	42 / 40 / 37	43 / 41 / 38	40 / 37 / 35	42 / 40 / 37	43 / 41 / 38
		Heating (Hi/Me/Lo)		40 / 37 / 35	42 / 40 / 37	43 / 41 / 38	40 / 37 / 35	42 / 40 / 37	43 / 41 / 38
	Outdoor	Cooling/Heating		49 / 49	50 / 51	51 / 51	49 / 49	50 / 51	51 / 51
Air flow ※	Indoor	Cooling (Hi/Me/Lo)	m^3/min	27 / 24 / 20	30 / 27 / 23	30 / 27 / 23	27 / 24 / 20	30 / 27 / 23	30 / 27 / 23
		Heating (Hi/Me/Lo)		27 / 24 / 20	30 / 27 / 23	30 / 27 / 23	27 / 24 / 20	30 / 27 / 23	30 / 27 / 23
	Outdoor	Cooling/Heating		75 / 73	75 / 73	75 / 73	75 / 73	75 / 73	75 / 73
Exterior dimensions	Indoor	HeightxWidthxDepth	mm	Unit: 298 x 840 x 840 Panel: 35 x 950 x 950					
	Outdoor			845 x 970 x 370					
Net weight	Indoor		kg	32.5(Unit:27 Panel:5.5)					
	Outdoor			81			83		
Ref.piping size	Liquid/Gas		ømm	9.52(3/8") / 15.88(5/8")					
Refrigerant line (one way) length			m	Max.50					
Vertical height differences		Outdoor is higher/lower	m	Max.30 / Max.15					
Outdoor operating temperature range		Cooling	°C	-15~43*2					
		Heating		-20~20					
Panel				T-PSA-3BW-E					
Air filter, Q'ty				Pocket plastic net x 1(Washable)					
Remote control (option)				wired:RC-EX1A, RC-E5, RCH-E3 wireless:RCN-T-36W-E					

The data are measured under the following conditions(ISO-T1).
Cooling:Indoor temp. of 27˚CDB, 19˚CWB, and outdoor temp. of 35˚CDB. Heating:Indoor temp. of 20˚CDB, and outdoor temp. of 7˚CDB, 6˚CWB.
*1 : Indicates the value in an anechoic chamber. During operation these values are somewhat higher due to ambient conditions.
*2 : If a cooling operation is conducted when the outdoor air temperature is –5˚C or lower, the outdoor unit should be installed at a place where it is not influenced by natural wind. If wind blows, the low pressure will drop and compressor frequency will increase, this will cause the capacity to drop and may cause the unit to break down.

※ Powerful-Hi can be selected. Sound level: 100VN(S)VF1 51dB, 125/140VN(S)VF 51dB
Air flow: 100VN(S)VF1 37m^3/min, 125/140VN(S)VF 37m^3/min

DUCT CONNECTED -High Static pressure-

FDU

R410A

FDU 100/125/140

FDU 200/250

Remote control (Option)

Wired

RC-EX1A RC-E5 RCH-E3

Wireless

RCN-KIT3-E

Fan control kit
(100~200Pa) (option)

U-FCRA
[For FDU 200/250]

Adaptability to higher static pressures

High static pressure of 200 Pa

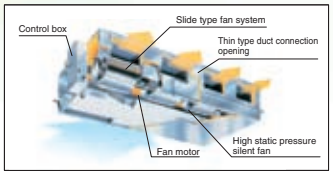

SPECIFICATIONS

				Micro Inverter	
Set model name				FDU100VNVF1	FDU125VNVF
Indoor unit				FDU100VF1	FDU125VF
Outdoor unit				FDC100VN	FDC125VN
Power source				1 Phase 220-240V 50Hz, 1 Phase 220V 60Hz	
Nominal cooling capacity (Min~Max)			kW	10.0 (4.0 ~ 11.2)	12.5 (5.0 ~ 14.0)
Nominal heating capacity (Min~Max)			kW	11.2 (4.0 ~ 12.5)	14.0 (4.0 ~ 16.0)
Power consumption		Cooling/Heating	kW	2.80 / 3.02	3.90 / 3.88
EER/COP		Cooling/Heating		3.57 / 3.71	3.21 / 3.61
Inrush current		220/230/240 V	A	5	5
Max. running current				25	27
Sound power level*1	Indoor	Cooling/Heating	dB(A)	65 / 65	67 / 67
	Outdoor	Cooling/Heating		70 / 70	72 / 72
Sound pressure level*1 ※	Indoor	Cooling (Hi/Me/Lo)		38 / 36 / 30	40 / 34 / 29
		Heating (Hi/Me/Lo)		38 / 36 / 30	40 / 34 / 29
	Outdoor	Cooling/Heating		49 / 49	50 / 51
Air flow ※	Indoor	Cooling (Hi/Me/Lo)	m^3/min	28 / 25 / 19	32 / 26 / 20
		Heating (Hi/Me/Lo)		28 / 25 / 19	32 / 26 / 20
	Outdoor	Cooling/Heating		75 / 73	75 / 73
External static pressure*2			Pa	Standard:60 Max:200	
Exterior dimensions	Indoor	HeightxWidthxDepth	mm	280 x 1,370 x 740	
	Outdoor			845 x 970 x 370	
Net weight	Indoor		kg	54	
	Outdoor			81	
Ref.piping size	Liquid/Gas		ømm	9.52(3/8") / 15.88(5/8")	
Refrigerant line (one way) length			m	Max.50	
Vertical height differences	Outdoor is higher/lower		m	Max.30 / Max.15	
Outdoor operating temperature range	Cooling		°C	-15~43*3	
	Heating			-20~20	
Air filter				Procure locally	
Remote control (option)				wired:RC-EX1A, RC-E5, RCH-E3 wireless:RCN-KIT3-E	

Dimensions : refer to page 12

SPECIFICATIONS

				Micro Inverter					
Set model name				FDU140VNVF	FDU100VSVF1	FDU125VSVF	FDU140VSVF	FDU200VSVF	FDU250VSVF
Indoor unit				FDU140VF	FDU100VF1	FDU125VF	FDU140VF	FDU200VF	FDU250VF
Outdoor unit				FDC140VN	FDC100VS	FDC125VS	FDC140VS	FDC200VS	FDC250VS
Power source				1 Phase 220-240V 50Hz, 1 Phase 220V 60Hz	3 Phase 380-415V 50Hz, 3 Phase 380V 60Hz				
Nominal cooling capacity (Min~Max)			kW	14.0 (5.0 ~ 14.5)	10.0 (4.0 ~ 11.2)	12.5 (5.0 ~ 14.0)	14.0 (5.0 ~ 14.5)	20.0 (7.0 ~ 22.4)	25.0 (10.0 ~ 28.0)
Nominal heating capacity (Min~Max)			kW	16.0 (4.0 ~ 16.5)	11.2 (4.0 ~ 12.5)	14.0 (4.0 ~ 16.0)	16.0 (4.0 ~ 16.5)	22.4 (7.6 ~ 25.0)	28.0 (9.5 ~ 31.5)
Power consumption		Cooling/Heating	kW	4.95 / 4.69	2.80 / 3.02	3.90 / 3.88	4.95 / 4.69	50Hz:6.59 / 6.08	50Hz:9.91 / 8.50
								60Hz:6.58 / 5.84	60Hz:10.21 / 8.22
EER/COP		Cooling/Heating		2.83 / 3.41	3.57 / 3.71	3.21 / 3.61	2.83 / 3.41	50Hz:3.03 / 3.68	50Hz:2.52 / 3.29
								60Hz:3.04 / 3.84	60Hz:2.45 / 3.41
Inrush current		220/230/240 V	A	5	5	5	5	5	5
Max. running current				28	16	18	19	24	27
Sound power level*1	Indoor	Cooling/Heating	dB(A)	70 / 70	65 / 65	67 / 67	70 / 70	75 / 75	76 / 76
	Outdoor	Cooling/Heating		73 / 73	70 / 70	72 / 72	73 / 73	74 / 74	74 / 74
Sound pressure level*1 ※	Indoor	Cooling (Hi/Me/Lo)		40 / 35 / 30	38 / 36 / 30	40 / 34 / 29	40 / 35 / 30	51 / 51	52 / 52
		Heating (Hi/Me/Lo)		40 / 35 / 30	38 / 36 / 30	40 / 34 / 29	40 / 35 / 30	51 / 51	52 / 52
	Outdoor	Cooling/Heating		51 / 51	49 / 49	50 / 51	51 / 51	57 / 57	57 / 58
Air flow ※	Indoor	Cooling (Hi/Me/Lo)	m^3/min	35 / 28 / 22	28 / 25 / 19	32 / 26 / 20	35 / 28 / 22	51(Hi) / 60(Hi)	68(Hi) / 80(Hi)
		Heating (Hi/Me/Lo)		35 / 28 / 22	28 / 25 / 19	32 / 26 / 20	35 / 28 / 22	51(Hi) / 60(Hi)	68(Hi) / 80(Hi)
	Outdoor	Cooling/Heating		75 / 73	75 / 73	75 / 73	75 / 73	150 / 145	
External static pressure*2			Pa	Standard:60 Max:200				Standard:100 Max:200	
Exterior dimensions	Indoor	HeightxWidthxDepth	mm	280 x 1,370 x 740				360 x 1,570 x 830	
	Outdoor			845 x 970 x 370				1,300 x 970 x 370	1,505 x 970 x 370
Net weight	Indoor		kg	54				92	
	Outdoor			81	83			122	140
Ref.piping size	Liquid/Gas		ømm	9.52(3/8") / 15.88(5/8")				9.52(3/8") / 25.4(1")	12.7(1/2") / 25.4(1")
Refrigerant line (one way) length			m	50				Max.70	
Vertical height differences	Outdoor is higher/lower		m	Max.30 / Max.15				Max.30 / Max.15	
Outdoor operating temperature range	Cooling		°C	-15~43*3				-15~43*3	
	Heating			-20~20				-15~20	
Air filter				Procure locally					
Remote control (option)				wired:RC-EX1A, RC-E5, RCH-E3 wireless:RCN-KIT3-E					

The data are measured under the following conditions(ISO-T1).
Cooling:Indoor temp. of 27˚CDB, 19˚CWB, and outdoor temp. of 35˚CDB. Heating:Indoor temp. of 20˚CDB, and outdoor temp. of 7˚CDB, 6˚CWB.
External static pressure is 60Pa (100/125/140), 100Pa (200/250).

*1 : Indicates the value in an anechoic chamber. During operation these values are somewhat higher due to ambient conditions.

*2 : External static pressure is changeable to be set by the remote control. MAX external static pressure is "High static pressure" setting. The values of sound pressure level become 5dB(A) higher at external static pressure of 200Pa.

*3 : If a cooling operation is conducted when the outdoor air temperature is –5˚C or lower, the outdoor unit should be installed at a place where it is not influenced by natural wind. If wind blows, the low pressure will drop and compressor frequency will increase, this will cause the capacity to drop and may cause the unit to break down.

※ Powerful-Hi can be selected. Sound level: 100VN(S)VF1 44dB, 125VN(S)VF 45dB, 140VN(S)VF 47dB
Air flow: 100VN(S)VF1 36m^3/min, 125VN(S)VF 39m^3/min, 140VN(S)VF 48m^3/min

DUCT CONNECTED -Low/Middle Static pressure-

FDUM

R410A

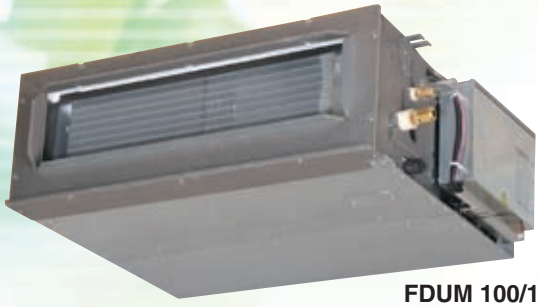

FDUM 100/125/140

external static pressure loss:5Pa

Filter kit (option)
UM-FL3EF : for 100, 125, 140

Remote control (Option)

Wired

RC-EX1A

RC-E5

RCH-E3

Wireless

RCN-KIT3-E

Dimensions : refer to page 14

SPECIFICATIONS

				Micro Inverter					
Set model name				FDUM100VNVF1	FDUM125VNVF	FDUM140VNVF	FDUM100VSVF1	FDUM125VSVF	FDUM140VSVF
Indoor unit				FDUM100VF1	FDUM125VF	FDUM140VF	FDUM100VF1	FDUM125VF	FDUM140VF
Outdoor unit				FDC100VN	FDC125VN	FDC140VN	FDC100VS	FDC125VS	FDC140VS
Power source				1 Phase 220-240V 50Hz, 1 Phase 220V 60Hz			3 Phase 380-415V 50Hz, 3Phase 380V 60Hz		
Nominal cooling capacity (Min~Max)			kW	10.0 (4.0 ~ 11.2)	12.5 (5.0 ~ 14.0)	14.0 (5.0 ~ 14.5)	10.0 (4.0 ~ 11.2)	12.5 (5.0 ~ 14.0)	14.0 (5.0 ~ 14.5)
Nominal heating capacity (Min~Max)			kW	11.2 (4.0 ~ 12.5)	14.0 (4.0 ~ 16.0)	16.0 (4.0 ~ 16.5)	11.2 (4.0 ~ 12.5)	14.0 (4.0 ~ 16.0)	16.0 (4.0 ~ 16.5)
Power consumption		Cooling/Heating	kW	2.80 / 3.02	3.90 / 3.88	4.95 / 4.69	2.80 / 3.02	3.90 / 3.88	4.95 / 4.69
EER/COP		Cooling/Heating		3.57 / 3.71	3.21 / 3.61	2.83 / 3.41	3.57 / 3.71	3.21 / 3.61	2.83 / 3.41
Inrush current		220/230/240 V	A	5	5	5	5	5	5
Max. running current				24	24	24	15	15	15
Sound power level*1	Indoor	Cooling/Heating	dB(A)	65 / 65	67 / 67	70 / 70	65 / 65	67 / 67	70 / 70
	Outdoor	Cooling/Heating		70 / 70	72 / 72	73 / 73	70 / 70	72 / 72	73 / 73
Sound pressure level*1 ※	Indoor	Cooling (Hi/Me/Lo)		38 / 36 / 30	40 / 34 / 29	40 / 35 / 30	38 / 36 / 30	40 / 34 / 29	40 / 35 / 30
		Heating (Hi/Me/Lo)		38 / 36 / 30	40 / 34 / 29	40 / 35 / 30	38 / 36 / 30	40 / 34 / 29	40 / 35 / 30
	Outdoor	Cooling/Heating		49 / 49	50 / 51	51 / 51	49 / 49	50 / 51	51 / 51
Air flow ※	Indoor	Cooling (Hi/Me/Lo)	m^3/min	28 / 25 / 19	32 / 26 / 20	35 / 28 / 22	28 / 25 / 19	32 / 26 / 20	35 / 28 / 22
		Heating (Hi/Me/Lo)		28 / 25 / 19	32 / 26 / 20	35 / 28 / 22	28 / 25 / 19	32 / 26 / 20	35 / 28 / 22
	Outdoor	Cooling/Heating		75 / 73	75 / 73	75 / 73	75 / 73	75 / 73	75 / 73
External static pressure*2			Pa	Standard:60 Max:100					
Exterior dimensions	Indoor	HeightxWidthxDepth	mm	280 x 1,370 x 740					
	Outdoor			845 x 970 x 370					
Net weight	Indoor		kg	54					
	Outdoor			81			83		
Ref.piping size	Liquid/Gas		ømm	9.52(3/8") / 15.88(5/8")					
Refrigerant line (one way) length			m	Max.50					
Vertical height differences	Outdoor is higher/lower		m	Max.30 / Max.15					
Outdoor operating temperature range	Cooling		°C	-15~43*3					
	Heating			-20~20					
Air filter				Filter kit : UM-FL3EF (option)					
Remote control (option)				wired:RC-EX1A, RC-E5, RCH-E3 wireless:RCN-KIT3-E					

The data are measured under the following conditions(ISO-T1).
Cooling:Indoor temp. of 27˚CDB, 19˚CWB, and outdoor temp. of 35˚CDB. Heating:Indoor temp. of 20˚CDB, and outdoor temp. of 7˚CDB, 6˚CWB.
External static pressure of indoor units is 60Pa.

*1 : Indicates the value in an anechoic chamber. During operation these values are somewhat higher due to ambient conditions.

*2 : External static pressure is changeable to be set by the remote control. MAX external static pressure is "High static pressure" setting. The values of sound pressure level become 5dB(A) higher at external static pressure of 100Pa.

*3 : If a cooling operation is conducted when the outdoor air temperature is –5˚C or lower, the outdoor unit should be installed at a place where it is not influenced by natural wind. If wind blows, the low pressure will drop and compressor frequency will increase, this will cause the capacity to drop and may cause the unit to break down.

※ Powerful-Hi can be selected. Sound level: 100VN(S)VF1 44dB, 125VN(S)VF 45dB, 140VN(S)VF 47dB
Air flow: 100VN(S)VF1 36m^3/min, 125VN(S)VF 39m^3/min,140VN(S)VF 48m^3/min

CEILING SUSPENDED

FDEN

R410A

FDEN 100/125/140

Remote control (Option)

Wired

RC-EX1A

RC-E5

RCH-E3

Wireless

RCN-E1R

Dimensions : refer to page 16

SPECIFICATIONS

				Micro Inverter					
Set model name				FDEN100VNVF1	FDEN125VNVF	FDEN140VNVF	FDEN100VSVF1	FDEN125VSVF	FDEN140VSVF
Indoor unit				FDEN100VF1	FDEN125VF	FDEN140VF	FDEN100VF1	FDEN125VF	FDEN140VF
Outdoor unit				FDC100VN	FDC125VN	FDC140VN	FDC100VS	FDC125VS	FDC140VS
Power source				1 Phase 220-240V 50Hz, 1 Phase 220V 60Hz			3 Phase 380-415V 50Hz, 3Phase 380V 60Hz		
Nominal cooling capacity (Min~Max)			kW	10.0 (4.0 ~ 11.2)	12.5 (5.0 ~ 14.0)	14.0 (5.0 ~ 14.5)	10.0 (4.0 ~ 11.2)	12.5 (5.0 ~ 14.0)	14.0 (5.0 ~ 14.5)
Nominal heating capacity (Min~Max)			kW	11.2 (4.0 ~ 12.5)	14.0 (4.0 ~ 16.0)	16.0 (4.0 ~ 16.5)	11.2 (4.0 ~ 12.5)	14.0 (4.0 ~ 16.0)	16.0 (4.0 ~ 16.5)
Power consumption		Cooling/Heating	kW	2.85 / 2.97	4.45 / 4.08	5.80 / 4.92	2.85 / 2.97	4.45 / 4.08	5.80 / 4.92
EER/COP		Cooling/Heating		3.51 / 3.77	2.81 / 3.43	2.41 / 3.25	3.51 / 3.77	2.81 / 3.43	2.41 / 3.25
Inrush current		220/230/240 V	A	5	5	5	5	5	5
Max. running current				24	24	24	15	15	15
Sound power level*1	Indoor	Cooling/Heating	dB(A)	64 / 64	67 / 67	67 / 67	64 / 64	67 / 67	67 / 67
	Outdoor	Cooling/Heating		70 / 70	72 / 72	73 / 73	70 / 70	72 / 72	73 / 73
Sound pressure level*1 ※	Indoor	Cooling (Hi/Me/Lo)		44 / 41 / 39	46 / 44 / 43	46 / 44 / 43	44 / 41 / 39	46 / 44 / 43	46 / 44 / 43
		Heating (Hi/Me/Lo)		44 / 41 / 39	46 / 44 / 43	46 / 44 / 43	44 / 41 / 39	46 / 44 / 43	46 / 44 / 43
	Outdoor	Cooling/Heating		49 / 49	50 / 51	51 / 51	49 / 49	50 / 51	51 / 51
Air flow ※	Indoor	Cooling (Hi/Me/Lo)	m^3/min	26 / 23 / 21	29 / 26 / 23	29 / 26 / 23	26 / 23 / 21	29 / 26 / 23	29 / 26 / 23
		Heating (Hi/Me/Lo)		26 / 23 / 21	29 / 26 / 23	29 / 26 / 23	26 / 23 / 21	29 / 26 / 23	29 / 26 / 23
	Outdoor	Cooling/Heating		75 / 73	75 / 73	75 / 73	75 / 73	75 / 73	75 / 73
Exterior dimensions	Indoor	HeightxWidthxDepth	mm	250 x 1,620 x 690					
	Outdoor			845 x 970 x 370					
Net weight	Indoor		kg	49					
	Outdoor			81			83		
Ref.piping size	Liquid/Gas		ømm	9.52(3/8") / 15.88(5/8")					
Refrigerant line (one way) length			m	Max.50					
Vertical height differences		Outdoor is higher/lower	m	Max.30 / Max.15					
Outdoor operating temperature range		Cooling	℃	-15~43*2					
		Heating		-20~20					
Air filter, Q'ty				Pocket Plastic net x2(Washable)					
Remote control (option)				wired:RC-EX1A, RC-E5, RCH-E3 wireless:RCN-KIT3-E					

The data are measured under the following conditions(ISO-T1).
Cooling:Indoor temp. of 27˚CDB, 19˚CWB, and outdoor temp. of 35˚CDB. Heating:Indoor temp. of 20˚CDB, and outdoor temp. of 7˚CDB, 6˚CWB.
*1 : Indicates the value in an anechoic chamber. During operation these values are somewhat higher due to ambient conditions.
*2 : If a cooling operation is conducted when the outdoor air temperature is –5˚C or lower, the outdoor unit should be installed at a place where it is not influenced by natural wind. If wind blows, the low pressure will drop and compressor frequency will increase, this will cause the capacity to drop and may cause the unit to break down.

※ Powerful-Hi can be selected. Sound level: 100VN(S)VF1 46dB, 125/140VN(S)VF 50dB
Air flow: 100VN(S)VF1 28m^3/min, 125/140VN(S)VF 32m^3/min

FLOOR STANDING

FDF

R410A

Wireless remote control (Option)

RCN-KIT3-E

FDF 100/125/140

Dimensions : refer to page 18

SPECIFICATIONS

				Micro Inverter					
Set model name				FDF100VNVD1	FDF125VNVD	FDF140VNVD	FDF100VSVD1	FDF125VSVD	FDF140VSVD
Indoor unit				FDF100VD1	FDF125VD	FDF140VD	FDF100VD1	FDF125VD	FDF140VD
Outdoor unit				FDC100VN	FDC125VN	FDC140VN	FDC100VS	FDC125VS	FDC140VS
Power source				1 Phase 220-240V 50Hz, 1 Phase 220V 60Hz			3 Phase 380-415V 50Hz, 3Phase 380V 60Hz		
Nominal cooling capacity (Min~Max)			kW	10.0 (4.0 ~ 11.2)	12.5 (5.0 ~ 14.0)	14.0 (5.0 ~ 14.5)	10.0 (4.0 ~ 11.2)	12.5 (5.0 ~ 14.0)	14.0 (5.0 ~ 14.5)
Nominal heating capacity (Min~Max)			kW	11.2 (4.0 ~ 12.5)	14.0 (4.0 ~ 16.0)	16.0 (4.0 ~ 16.5)	11.2 (4.0 ~ 12.5)	14.0 (4.0 ~ 16.0)	16.0 (4.0 ~ 16.5)
Power consumption		Cooling/Heating	kW	3.12 / 3.10	4.40 / 4.36	5.15 / 5.31	3.12 / 3.10	4.40 / 4.36	5.15 / 5.31
EER/COP		Cooling/Heating		3.21 / 3.61	2.84 / 3.21	2.72 / 3.01	3.21 / 3.61	2.84 / 3.21	2.72 / 3.01
Inrush current		220/230/240 V	A	5	5	5	5	5	5
Max. running current				24	24	24	15	15	15
Sound power level*1	Indoor	Cooling/Heating	dB(A)	65 / 65	73 / 73	73 / 73	65 / 65	73 / 73	73 / 73
	Outdoor	Cooling/Heating		70 / 70	72 / 72	73 / 73	70 / 70	72 / 72	73 / 73
Sound pressure level*1 ※	Indoor	Cooling (Hi/Me/Lo)		50 / 48 / 44	50 / 48 / 44	50 / 48 / 44	50 / 48 / 44	50 / 48 / 44	50 / 48 / 44
		Heating (Hi/Me/Lo)		50 / 48 / 44	50 / 48 / 44	50 / 48 / 44	50 / 48 / 44	50 / 48 / 44	50 / 48 / 44
	Outdoor	Cooling/Heating		49 / 49	50 / 51	51 / 51	49 / 49	50 / 51	51 / 51
Air flow ※	Indoor	Cooling (Hi/Me/Lo)	m^3/min	26 / 23 / 19	26 / 23 / 19	26 / 23 / 19	26 / 23 / 19	26 / 23 / 19	26 / 23 / 19
		Heating (Hi/Me/Lo)		26 / 23 / 19	26 / 23 / 19	26 / 23 / 19	26 / 23 / 19	26 / 23 / 19	26 / 23 / 19
	Outdoor	Cooling/Heating		75 / 73	75 / 73	75 / 73	75 / 73	75 / 73	75 / 73
Exterior dimensions	Indoor	HeightxWidthxDepth	mm	1,850 x 600 x 320					
	Outdoor			845 x 970 x 370					
Net weight	Indoor		kg	52					
	Outdoor			81			83		
Ref.piping size	Liquid/Gas		ømm	9.52(3/8") / 15.88(5/8")					
Refrigerant line (one way) length			m	Max.50					
Vertical height differences		Outdoor is higher/lower	m	Max.30 / Max.15					
Outdoor operating temperature range		Cooling	°C	-15~43*2					
		Heating		-20~20					
Air filter, Q'ty				Plastic net x 1(Washable)					
Remote control				wired:RC-E5 (installed) wireless:RCN-KIT3-E (option)					

The data are measured under the following conditions(ISO-T1).
Cooling:Indoor temp. of 27˚CDB, 19˚CWB, and outdoor temp. of 35˚CDB. Heating:Indoor temp. of 20˚CDB, and outdoor temp. of 7˚CDB, 6˚CWB.
*1 : Indicates the value in an anechoic chamber. During operation these values are somewhat higher due to ambient conditions.
*2 : If a cooling operation is conducted when the outdoor air temperature is –5˚C or lower, the outdoor unit should be installed at a place where it is not influenced by natural wind. If wind blows, the low pressure will drop and compressor frequency will increase, this will cause the capacity to drop and may cause the unit to break down.

※ Powerful-Hi can be selected. Sound level:100VN(S)VD1 54dB, 125/140VN(S)VD 54dB
Air flow: 100VN(S)VD1 29m^3/min, 125/140VN(S)VD 29m^3/min

OUTDOOR UNIT (1.5-10.0HP)

Hyper Inverter

SRC40ZMX-S
SRC50ZMX-S*
SRC60ZMX-S*
(1.5HP~2.5HP)

FDC71VNX
(3.0HP)

FDC100VNX
FDC100VSX
(4.0HP)
FDC125VNX
FDC125VSX
(5.0HP)
FDC140VNX
FDC140VSX
(6.0HP)

*SRC50/60ZMX-S is common for both of outdoor units of SRK50/60ZMX-S (Residential Air-conditioners) and 1.5, 2, 2.5HP of Inverter Packaged Air-Conditioners. Common components make for easy inventory control and the installation procedure will be the same.

Blue Fin (3~10HP)

Due to application of blue coated fins (KS101) for the heat exchanger of new outdoor unit, corrosion resistance has been improved compared to current models.

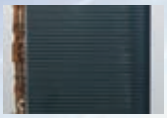

Base heater kit (option)

This kit is recommended to be used in an area where the lowest temperature drops below 0˚C.

CW-H-E1
applied for
FDC71VNX
FDC100~250VN,VS
FDC100~140VNX,VSX

Micro Inverter

FDC100VN FDC100VS
FDC125VN FDC125VS
FDC140VN FDC140VS
(4.0HP~6.0HP)

FDC200VS
(8.0HP)

FDC250VS
(10.0HP)

Standard Inverter

FDC71VNP
(3.0HP)

FDC90VNP
(3.5HP)

Installation workability (FDC200VS,250VS)

Using piping attachment that has flared connection and brazed connection ends, there is no need conduct brazing work inside the outdoor unit.

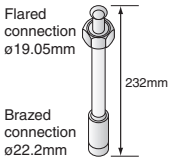

Installation workability

Enhanced installation workability thanks to the extended pipe length – longest level in the industry and precharged refrigerant.

Point 1 Piping length – 100m (Hyper Inverter 4~6HP)

Refer to our Technical Manual in detail

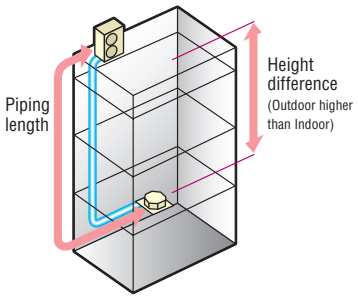

Hyper Inverter

HP	Piping length	Height difference
1.5~2.5	30m	20m
3	50m	30m
4~6	100m	30m

Micro Inverter

HP	Piping length	Height difference
4~6	50m	30m
8·10	70m	30m

Standard Inverter

HP	Piping length	Height difference
3·3.5	30m	20m

Point 2 Refrigerant precharged piping length extending to 30m

Refrigerant precharged piping length extends up to 30m. This eliminates the need to add refrigerant on site, which sets it free from trouble of excessive or insufficient charging of refrigerant, and allows carrying out the installation smoothly. That of Hyper inverter 1.5~2.5HP & Standard inverter is up to 15m.

Standard Inverter [INDOOR UNIT]

CEILING CASSETTE
4way
FDT

DUCT CONNECTED
High Static pressure
FDU

Low/Middle Static pressure
FDUM

CEILING SUSPENDED
FDEN

Filter kit (option)

UM-FL2EF : for 71
UM-FL3EF : for 100
(For FDUM)
external static pressure loss:5Pa

FLOOR STANDING
FDF

WALL MOUNTED
SRK
NEW

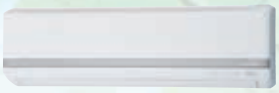

Dimensions (Unit:mm)

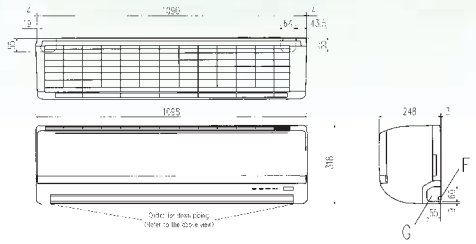

Remote control (Option)

Wired

RC-EX1A

RC-E5

RCH-E3

(For FDT, FDU, FDUM, FDE, SRK)

Wireless

RCN-TC-36W-E
(For FDT)

RCN-KIT3-E
(For FDU, FDUM, FDF)

RCN-E1R
(For FDEN)

SPECIFICATIONS

				Standard Inverter			
Set model name				FDT71VNPVF1	FDT90VNPVF1	FDU71VNPVF1	FDU90VNPVF1
Indoor unit				FDT71VF1	FDT100VF1	FDU71VF1	FDU100VF1
Outdoor unit				FDC71VNP	FDC90VNP	FDC71VNP	FDC90VNP
Power source				1 Phase 220-240V 50Hz, 1 Phase 220V 60Hz			
Nominal cooling capacity (Min~Max)			kW	7.1 (1.4 ~ 7.1)	9.0 (1.9 ~ 9.0)	7.1 (1.4 ~ 7.1)	9.0 (1.9 ~ 9.0)
Nominal heating capacity (Min~Max)			kW	7.1 (1.0 ~ 7.1)	9.0 (1.5 ~ 9.0)	7.1 (1.0 ~ 7.1)	9.0 (1.5 ~ 9.0)
Power consumption		Cooling/Heating	kW	2.50 / 1.90	2.67 / 2.19	2.63 / 1.96	2.65 / 2.25
EER/COP		Cooling/Heating		2.84 / 3.74	3.37 / 4.11	2.70 / 3.62	3.40 / 4.00
Inrush current		220/230/240 V	A	5	5	5	5
Max. running current				14.5	18.0	14.5	18.0
Sound power level*1	Indoor	Cooling/Heating	dB(A)	64 / 64	65 / 65	65 / 65	65 / 65
	Outdoor	Cooling/Heating		67 / 67	69 / 69	67 / 67	69 / 69
Sound pressure level*1 ※	Indoor	Cooling (Hi/Me/Lo)		35 / 33 / 31	40 / 37 / 35	33 / 29 / 25	38 / 36 / 30
		Heating (Hi/Me/Lo)		35 / 33 / 31	40 / 37 / 35	33 / 29 / 25	38 / 36 / 30
	Outdoor	Cooling/Heating		54 / 54	57 / 55	54 / 54	57 / 55
Air flow ※	Indoor	Cooling (Hi/Me/Lo)	m^3/min	21 / 19 / 17	27 / 24 / 20	19 / 15 / 10	28 / 25 / 19
		Heating (Hi/Me/Lo)		21 / 19 / 17	27 / 24 / 20	19 / 15 / 10	28 / 25 / 19
	Outdoor	Cooling/Heating		36 / 36	63 / 49.5	36 / 36	63 / 49.5
Exterior dimensions	Indoor	HeightxWidthxDepth	mm	unit: 246 x 840 x 840 panel: 35 x 950 x 950	unit: 298 x 840 x 840 panel: 35 x 950 x 950	280 x 950 x 635	280 x 1,370 x 740
	Outdoor			640 x 800 x 290	750 x 880 x 340	640 x 800 x 290	750 x 880 x 340
Net weight	Indoor		kg	29.5 (unit: 24 panel: 5.5)	32.5 (unit: 27 panel: 5.5)	34	54
	Outdoor			45	57	45	57
Ref.piping size	Liquid/Gas		ømm	6.35 / 12.7	9.52 / 15.88	6.35 / 12.7	6.35 / 15.88
Refrigerant line (one way) length			m	30			
Vertical height differences	Outdoor is higher/lower		m	Max.20 / Max.20			
Outdoor operating temperature range	Cooling		°C	-15~46*2			
	Heating			-15~20			
Air filter, Q'ty				Pocket Plastic net x1(Washable)		Procure locally	
Remote control (option)				wired:RC-EX1A, RC-E5, RCH-E3 wireless:RCN-T-36W-E		wired:RC-EX1A, RC-E5, RCH-E3 wireless:RCN-KIT3-E	

The data are measured under the following conditions(ISO-T1).
Cooling:Indoor temp. of 27˚CDB, 19˚CWB, and outdoor temp. of 35˚CDB. Heating:Indoor temp. of 20˚CDB, and outdoor temp. of 7˚CDB, 6˚CWB.
*1 : Indicates the value in an anechoic chamber. During operation these values are somewhat higher due to ambient conditions.
*2 : If a cooling operation is conducted when the outdoor air temperature is –5˚C or lower, the outdoor unit should be installed at a place where it is not influenced by natural wind. If wind blows, the low pressure will drop and compressor frequency will increase, this will cause the capacity to drop and may cause the unit to break down.

※ Powerful-Hi for FDT can be selected. Sound level : FDT71VNPVF1 46dB(A), FDT90VNPVF1 51dB(A) Air flow : FDT71VNPVF1 28m^3/min, FDT90VNPVF1 37m^3/min
Powerful-Hi for FDU can be selected. Sound level : FDU71VNPVF1 38dB(A), FDU90VNPVF1 44dB(A) Air flow : FDU71VNPVF1 24m^3/min, FDU90VNPVF1 36m^3/min

SPECIFICATIONS

				Standard Inverter			
Set model name				FDUM71VNPVF1	FDUM90VNPVF1	FDEN71VNPVF1	FDEN90VNPVF1
Indoor unit				FDUM71VF1	FDUM100VF1	FDEN71VF1	FDEN100VF1
Outdoor unit				FDC71VNP	FDC90VNP	FDC71VNP	FDC90VNP
Power source				1 Phase 220-240V 50Hz, 1 Phase 220V 60Hz			
Nominal cooling capacity (Min~Max)			kW	7.1 (1.4 ~ 7.1)	9.0 (1.9 ~ 9.0)	7.1 (1.4 ~ 7.1)	9.0 (1.9 ~ 9.0)
Nominal heating capacity (Min~Max)			kW	7.1 (1.0 ~ 7.1)	9.0 (1.5 ~ 9.0)	7.1 (1.0 ~ 7.1)	9.0 (1.5 ~ 9.0)
Power consumption		Cooling/Heating	kW	2.63 / 1.96	2.65 / 2.25	2.50 / 1.96	2.75 / 2.25
EER/COP		Cooling/Heating		2.70 / 3.62	3.40 / 4.00	2.84 / 3.62	3.27 / 4.00
Inrush current		220/230/240 V	A	5	5	5	5
Max. running current				14.5	18.0	14.5	18.0
Sound power level*1	Indoor	Cooling/Heating	dB(A)	65 / 65	65 / 65	62 / 62	64 / 64
	Outdoor	Cooling/Heating		67 / 67	69 / 69	67 / 67	69 / 69
Sound pressure level*1 ※	Indoor	Cooling (Hi/Me/Lo)		33 / 29 / 25	38 / 36 / 30	41 / 39 / 38	44 / 41 / 39
		Heating (Hi/Me/Lo)		33 / 29 / 25	38 / 36 / 30	41 / 39 / 38	44 / 41 / 39
	Outdoor	Cooling/Heating		54 / 54	57 / 55	54 / 54	57 / 55
Air flow ※	Indoor	Cooling (Hi/Me/Lo)	m^3/min	19 / 15 / 10	28 / 25 / 19	16 / 14 / 12	26 / 23 / 21
		Heating (Hi/Me/Lo)		19 / 15 / 10	28 / 25 / 19	16 / 14 / 12	26 / 23 / 21
	Outdoor	Cooling/Heating		36 / 36	63 / 49.5	36 / 36	63 / 49.5
Exterior dimensions	Indoor	HeightxWidthxDepth	mm	280 x 950 x 635	280 x 1,370 x 740	210 x 1,320 x 690	250 x 1,620 x 690
	Outdoor			640 x 800 x 290	750 x 880 x 340	640 x 800 x 290	750 x 880 x 340
Net weight	Indoor		kg	34	54	37	49
	Outdoor			45	57	45	57
Ref.piping size	Liquid/Gas		ømm	6.35 / 12.7	6.35 / 15.88	6.35 / 12.7	6.35 / 15.88
Refrigerant line (one way) length			m	30			
Vertical height differences	Outdoor is higher/lower		m	Max.20 / Max.20			
Outdoor operating temperature range	Cooling		°C	-15~46*2			
	Heating			-15~20			
Air filter, Q'ty				Filter kit : UM-FL2EF/UM-FL3EF (option)		Pocket Plastic net x2(Washable)	
Remote control (option)				wired:RC-EX1A, RC-E5, RCH-E3 wireless:RCN-KIT3-E		wired:RC-EX1A, RC-E5, RCH-E3 wireless:RCN-E1R	

The data are measured under the following conditions(ISO-T1).
Cooling:Indoor temp. of 27˚CDB, 19˚CWB, and outdoor temp. of 35˚CDB. Heating:Indoor temp. of 20˚CDB, and outdoor temp. of 7˚CDB, 6˚CWB.
*1 : Indicates the value in an anechoic chamber. During operation these values are somewhat higher due to ambient conditions.
*2 : If a cooling operation is conducted when the outdoor air temperature is –5˚C or lower, the outdoor unit should be installed at a place where it is not influenced by natural wind. If wind blows, the low pressure will drop and compressor frequency will increase, this will cause the capacity to drop and may cause the unit to break down.
※ Powerful-Hi for FDUM can be selected. Sound level : FDUM71VNPVF1 38dB(A), FDUM90VNPVF1 44dB(A) Air flow : FDUM71VNPVF1 24m^3/min, FDUM90VNPVF1 36m^3/min
Powerful-Hi for FDEN can be selected. Sound level : FDEN71VNPVF1 50dB(A), FDEN90VNPVF1 46dB(A) Air flow : FDEN71VNPVF1 20m^3/min, FDEN90VNPVF1 28m^3/min

SPECIFICATIONS

				Standard Inverter		
Set model name				FDF71VNPVD1	FDF90VNPVD1	SRK71VNPZM
Indoor unit				FDF71VD1	FDF100VD1	SRK71ZM-S
Outdoor unit				FDC71VNP	FDC90VNP	FDC71VNP
Power source				1 Phase 220-240V 50Hz, 1 Phase 220V 60Hz		
Nominal cooling capacity (Min~Max)			kW	7.1 (1.4 ~ 7.1)	9.0 (1.9 ~ 9.0)	7.1 (1.4 ~ 7.1)
Nominal heating capacity (Min~Max)			kW	7.1 (1.0 ~ 7.1)	9.0 (1.5 ~ 9.0)	7.1 (1.0 ~ 7.1)
Power consumption		Cooling/Heating	kW	2.63 / 2.08	2.79 / 2.25	2.36 / 1.88
EER/COP		Cooling/Heating		2.70 / 3.41	3.23 / 4.00	3.01 / 3.78
Inrush current		220/230/240 V	A	5	5	5
Max. running current				14.5	18.0	14.5
Sound power level*1	Indoor	Cooling/Heating	dB(A)	61 / 61	65 / 65	60 / 61
	Outdoor	Cooling/Heating		67 / 67	69 / 69	67 / 67
Sound pressure level*1 ※	Indoor	Cooling (Hi/Me/Lo)		39 / 35 / 33	50 / 48 / 44	49 / 45 / 39 / (Ulo) 26
		Heating (Hi/Me/Lo)		39 / 35 / 33	50 / 48 / 44	46 / 43 / 38 / (Ulo) 35
	Outdoor	Cooling/Heating		54 / 54	57 / 55	54 / 54
Air flow ※	Indoor	Cooling (Hi/Me/Lo)	m^3/min	18 / 16 / 14	26 / 23 / 19	17.5 / 14 / 8
		Heating (Hi/Me/Lo)		18 / 16 / 14	26 / 23 / 19	19.5 / 15.5 / 14
	Outdoor	Cooling/Heating		36 / 36	63 / 49.5	36 / 36
Exterior dimensions	Indoor	HeightxWidthxDepth	mm	1,850 x 600 x 320		318 x 1,098 x 248
	Outdoor			640 x 800 x 290	750 x 880 x 340	640 x 800 x 290
Net weight	Indoor		kg	49	52	16
	Outdoor			45	57	45
Ref.piping size	Liquid/Gas		ømm	6.35 / 12.7	6.35 / 15.88	6.35 / 12.7
Refrigerant line (one way) length			m	23		30
Vertical height differences	Outdoor is higher/lower		m	Max.20 / Max.20		
Outdoor operating temperature range	Cooling		°C	-15~46*2		
	Heating			-15~20		
Air filter, Q'ty				Plastic net x1(Washable)		Polypropylene net (Washable) x2
Remote control (option)				wired:RC-E5 installed wireless:RCN-KIT3-E		wired:RC-EX1A, RC-E5, RCH-E3

The data are measured under the following conditions(ISO-T1).
Cooling:Indoor temp. of 27˚CDB, 19˚CWB, and outdoor temp. of 35˚CDB. Heating:Indoor temp. of 20˚CDB, and outdoor temp. of 7˚CDB, 6˚CWB.
*1 : Indicates the value in an anechoic chamber. During operation these values are somewhat higher due to ambient conditions.
*2 : If a cooling operation is conducted when the outdoor air temperature is –5˚C or lower, the outdoor unit should be installed at a place where it is not influenced by natural wind. If wind blows, the low pressure will drop and compressor frequency will increase, this will cause the capacity to drop and may cause the unit to break down.
※ Powerful-Hi can be selected. Sound level: FDF71VNPVD1 42dB, FDF90VNPVD1 54dB Air flow: FDF71VNPVD1 20m^3/min, FDF90VNPVD1 29m^3/min

MULTI SYSTEM

Up to Four indoor units can be connected to a single outdoor unit and simultaneously operated with a single remote control.

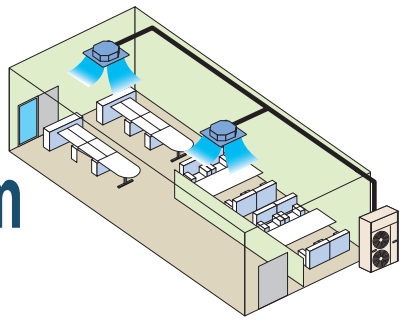

Twin / Triple / Double Twin Multi System

By referring to the following table for applicable indoor units, select the same models and capacities.

Applicable indoor units

Model	Capacity						Combination		
	40	50	60	71	100	125	Twin	Triple	Double Twin
4way **FDT**	●	●	●	●	●	●	●	●	●
4way compact (600 x 600mm) **FDTC**	●	●	●				●	●	●
Low/Middle Static pressure **FDUM**	●	●	●	●	●	●	●	●	
Ceiling Suspended **FDEN**	●	●	●	●	●	●	●	●	●
Wall Mounted **SRK** Only used with outdoor units of Multi System		●	●				●	●	
Floor Standing **FDF**				●	●	●	●		

Combination of indoor units

Outdoor Unit	Hyper Inverter				Micro Inverter				
	FDC71VNX	FDC100VNX FDC100VSX	FDC125VNX FDC125VSX	FDC140VNX FDC140VSX	FDC100VN FDC100VS	FDC125VN FDC125VS	FDC140VN FDC140VS	FDC200VS	FDC250VS
Twin	40 + 40	50 + 50	60 + 60	71 + 71	50 + 50	60 + 60	71 + 71	100 + 100	125 + 125
Triple				50 + 50 + 50			50 + 50 + 50	71 + 71 + 71	
Double Twin								50+50+50+50	60+60+60+60

Decision of piping specification

Diagrams below show the application as samples. For further information, refer to TECHNICAL MANUAL.

Twin type

Models FDC71VNX, FDC100~140VN/VS
[Branch pipe set : DIS-WA1]

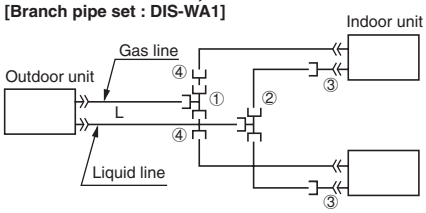

(Example)

Item / Model	Indoor unit combinations	Liquid pipe		Gas pipe	
		Main pipe	Branch pipe	Main pipe	Branch pipe
FDC71	40+40	ø9.52Xt0.8	ø9.52Xt0.8	ø15.88Xt1.0	ø12.7Xt0.8
FDC100	50+50				
FDC125	60+60				ø15.88Xt1.0
FDC140	71+71				

Notes (1) When 40-60 models of indoor units are applied to this combination, the reducer ③ supplied with the branch piping set should be used in order to reduce the liquid piping size from ø9.52mm to ø6.35mm at indoor unit side (flare connection). Accordingly be sure to select the liquid piping size ø9.52mm from branch to indoor unit.
(2) The reducer ④ is for FDC71 and 100 models only.

Chart of shapes of branch piping parts (DIS-WA1)	Gas pipe	Symbol	Liquid pipe	Symbol	Reducer	Symbol	Reducer	Symbol
	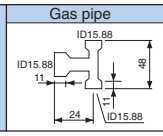	①	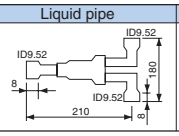	②	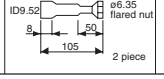	③	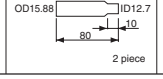	④

Notes (1) Symbol ① to ④ in the drawing shows the symbols of branch piping parts in the chart respectively.
(2) Branch piping should always be arranged to have level or perpendicular position.

The branch piping (both gas and liquid lines) should always be arranged to have a level or perpendicular position.

2-Way Branch

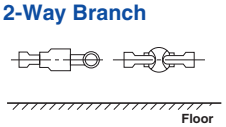

Mount —·— sections level with the floor.

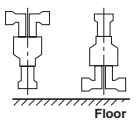

Mount —·— sections perpendicular to the floor.

3-Way Branch

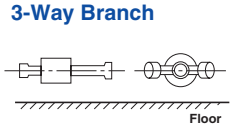

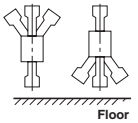

Ideal for the installation in large area and L-shaped rooms, the V Multi System has an extensive degree of flexibility in the selection of indoor units. Specifically, the selection of indoor units with different capacities in different types can be made.

V Multi System

Different models and capacities can be selected.

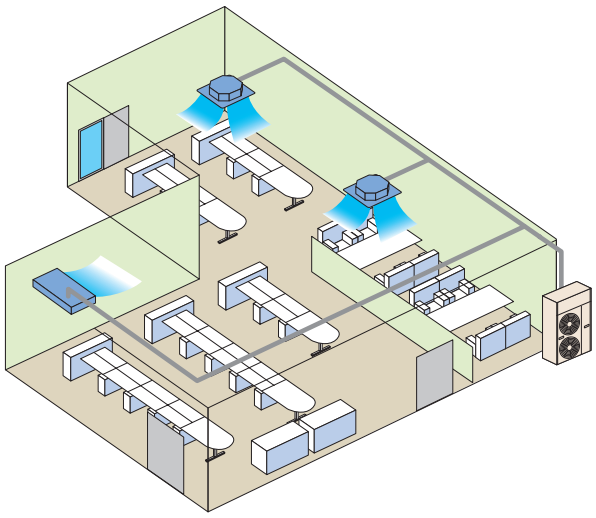

Applicable indoor units

Model \ Capacity	40	50	60	71	100	125
4way **FDT**	●	●	●	●	●	●
Ceiling Suspended **FDEN**	●	●	●	●	●	●

Combination of indoor units

Outdoor Unit				
Hyper Inverter	FDC71VNX	FDC100VNX FDC100VSX	FDC125VNX FDC125VSX	FDC140VNX FDC140VSX	——	——
Micro Inverter	——	FDC100VN FDC100VS	FDC125VN FDC125VS	FDC140VN FDC140VS	FDC200VS	FDC250VS
Twin	40 + 40	50 + 50	60 + 60 50 + 71	71 + 71	100 + 100 71 + 125	125 + 125
Triple				50 + 50 + 50	71 + 71 + 71	60 + 60 + 125 71 + 71 + 100
Double Twin					50+50+50+50	60+60+60+60

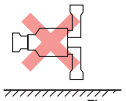
Floor

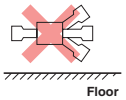
Floor

Triple type

The indoor_outdoor piping length differences among indoor units are less than 3m.

Model FDC140VN/VS
[Branch pipe set : DIS-TA1]

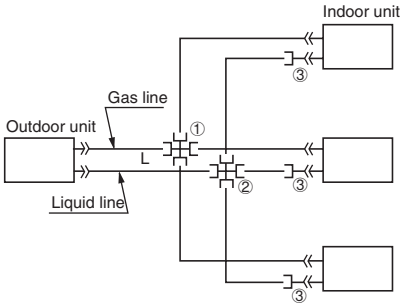

(Example)

Item / Model	Indoor unit combinations	Liquid pipe		Gas pipe	
		Main pipe	Branch pipe	Main pipe	Branch pipe
FDC140	50+50+50	ø9.52Xt0.8	ø9.52Xt0.8	ø15.88Xt1.0	ø12.7Xt0.8

Notes (1) The reducer ③ supplied with the branch piping set should be used in order to reduce the liquid piping size from ø9.52mm to ø6.35mm at indoor unit side (flare connection). Accordingly be sure to select the liquid piping size ø9.52mm from branch to indoor unit.

Chart of shapes of branch piping parts (DIS-TA1)	Gas pipe	Symbol	Liquid pipe	Symbol	Reducer	Symbol
	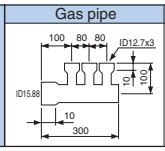	①	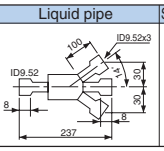	②	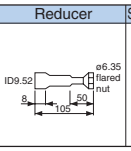	③

Notes (1) Symbol ① to ③ in the drawing shows the symbols of branch piping parts in the chart respectively.
(2) Branch piping should always be arranged to have level or perpendicular position.

CEILING CASSETTE -4way-

FDT

R410A

FDT 40/50/60/71/100/125

Remote control (Option)

Wired

RC-EX1A

RC-E5

RCH-E3

Wireless

RCN-T-36W-E

SPECIFICATIONS

The values are for simultaneous Multi operation.

				Hyper Inverter	
Set model name				FDT71VNXPVF	FDT100VNXPVF
				Twin	
Indoor unit				FDT40VF	FDT50VF
Outdoor unit				FDC71VNX	FDC100VNX
Power source				1 Phase 220-240V 50Hz, 1 Phase 220V 60Hz	
Nominal cooling capacity (Min~Max)			kW	7.1 (3.2 ~ 8.0)	10.0 (4.0 ~ 11.2)
Nominal heating capacity (Min~Max)			kW	8.0 (3.6 ~ 9.0)	11.2 (4.0 ~ 12.5)
Power consumption		Cooling/Heating	kW	1.85 / 1.99	2.56 / 2.66
EER/COP		Cooling/Heating		3.84 / 4.02	3.91 / 4.21
Inrush current		220/230/240 V	A	5	5
Max. running current				17	24
Sound power level*1	Indoor*2	Cooling/Heating	dB(A)	55 / 55	55 / 55
	Outdoor	Cooling/Heating		66 / 66	70 / 70
Sound pressure level*1 ※	Indoor*2	Cooling (Hi/Me/Lo)		33 / 31 / 30	33 / 31 / 30
		Heating (Hi/Me/Lo)		33 / 31 / 30	33 / 31 / 30
	Outdoor	Cooling/Heating		51 / 48	48 / 50
Air flow ※	Indoor*2	Cooling (Hi/Me/Lo)	m³/min	18 / 16 / 14	18 / 16 / 14
		Heating (Hi/Me/Lo)		18 / 16 / 14	18 / 16 / 14
	Outdoor	Cooling/Heating		60 / 50	100 / 100
Exterior dimensions	Indoor	HeightxWidthxDepth	mm	Unit: 246 x 840 x 840	Panel: 35 x 950 x 950
	Outdoor			750 x 880(+88) x 340	1,300 x 970 x 370
Net weight	Indoor		kg	27.5(Unit:22 Panel:5.5)	
	Outdoor			60	105
Ref.piping size	Liquid/Gas		ømm	9.52(3/8") / 15.88(5/8")	
Refrigerant line (one way) length			m	Max. 50	Max. 100
Vertical height differences	Outdoor is higher/lower		m	Max.30 / Max.15	
Outdoor operating temperature range	Cooling		℃	-15~43*3	
	Heating			-20~20	
Panel				T-PSA-3BW-E	
Air filter, Q'ty				Pocket plastic net X 1(Washable)	
Remote control (option)				wired:RC-EX1A, RC-E5, RCH-E3 wireless:RCN-T-36W-E	

SPECIFICATIONS

The values are for simultaneous Multi operation.

				Hyper Inverter						
Set model name				FDT125VNXPVF	FDT140VNXPVF1	FDT140VNXTVF	FDT100VSXPVF	FDT125VSXPVF	FDT140VSXPVF1	FDT140VSXTVF
				Twin		Triple	Twin			Triple
Indoor unit				FDT60VF	FDT71VF1	FDT50VF	FDT50VF	FDT60VF	FDT71VF1	FDT50VF
Outdoor unit				FDC125VNX	FDC140VNX	FDC140VNX	FDC100VSX	FDC125VSX	FDC140VSX	FDC140VSX
Power source				1 Phase 220-240V 50Hz, 1 Phase 220V 60Hz			3 Phase 380-415V 50Hz, 3 Phase 380V 60Hz			
Nominal cooling capacity (Min~Max)			kW	12.5 (5.0 ~ 14.0)	14.0 (5.0 ~ 16.0)	14.0 (5.0 ~ 16.0)	10.0 (4.0 ~ 11.2)	12.5 (5.0 ~ 14.0)	14.0 (5.0 ~ 16.0)	14.0 (5.0 ~ 16.0)
Nominal heating capacity (Min~Max)			kW	14.0 (4.0 ~ 17.0)	16.0 (4.0 ~ 18.0)	16.0 (4.0 ~ 18.0)	11.2 (4.0 ~ 16.0)	14.0 (4.0 ~ 18.0)	16.0 (4.0 ~ 20.0)	16.0 (4.0 ~ 20.0)
Power consumption		Cooling/Heating	kW	3.06 / 3.22	3.88 / 3.70	3.88 / 3.76	2.56 / 2.66	3.06 / 3.22	3.88 / 3.70	3.88 / 3.76
EER/COP		Cooling/Heating		4.08 / 4.35	3.61 / 4.32	3.61 / 4.26	3.91 / 4.21	4.08 / 4.35	3.61 / 4.32	3.61 / 4.26
Inrush current		220/230/240 V	A	5	5	5	5	5	5	5
Max. running current				26	26	26	15	15	15	15
Sound power level*1	Indoor*2	Cooling/Heating	dB(A)	60 / 60	64 / 64	55 / 55	55 / 55	60 / 60	64 / 64	55 / 55
	Outdoor	Cooling/Heating		70 / 70	72 / 72	72 / 72	70 / 70	70 / 70	72 / 72	72 / 72
Sound pressure level*1 ※	Indoor*2	Cooling (Hi/Me/Lo)		33 / 31 / 30	35 / 33 / 31	33 / 31 / 30	33 / 31 / 30	33 / 31 / 30	35 / 33 / 31	33 / 31 / 30
		Heating (Hi/Me/Lo)		33 / 31 / 30	35 / 33 / 31	33 / 31 / 30	33 / 31 / 30	33 / 31 / 30	35 / 33 / 31	33 / 31 / 30
	Outdoor	Cooling/Heating		48 / 50	49 / 52	49 / 52	48 / 50	48 / 50	49 / 52	49 / 52
Air flow ※	Indoor*2	Cooling (Hi/Me/Lo)	m³/min	18 / 16 / 14	21 / 19 / 17	18 / 16 / 14	18 / 16 / 14	18 / 16 / 14	21 / 19 / 17	18 / 16 / 14
		Heating (Hi/Me/Lo)		18 / 16 / 14	21 / 19 / 17	18 / 16 / 14	18 / 16 / 14	18 / 16 / 14	21 / 19 / 17	18 / 16 / 14
	Outdoor	Cooling/Heating		100 / 100	100 / 100	100 / 100	100 / 100	100 / 100	100 / 100	100 / 100
Exterior dimensions	Indoor	HeightxWidthxDepth	mm	Unit: 246 x 840 x 840 Panel: 35 x 950 x 950						
	Outdoor			1,300 x 970 x 370						
Net weight	Indoor		kg	29.5(Unit:24 Panel:5.5)		27.5(Unit:22 Panel:5.5)		29.5(Unit:24 Panel:5.5)		27.5(Unit:22 Panel:5.5)
	Outdoor			105						
Ref.piping size	Liquid/Gas		ømm	9.52(3/8") / 15.88(5/8")						
Refrigerant line (one way) length			m	Max.100						
Vertical height differences	Outdoor is higher/lower		m	Max.30 / Max.15						
Outdoor operating temperature range	Cooling		℃	-15~43*3						
	Heating			-20~20						
Panel				T-PSA-3BW-E						
Air filter, Q'ty				Pocket plastic net x 1(Washable)						
Remote control (option)				wired:RC-EX1A, RC-E5, RCH-E3 wireless:RCN-T-36W-E						

The data are measured under the following conditions(ISO-T1).
Cooling:Indoor temp. of 27˚CDB, 19˚CWB, and outdoor temp. of 35˚CDB. Heating:Indoor temp. of 20˚CDB, and outdoor temp. of 7˚CDB, 6˚CWB.
*1 : Indicates the value in an anechoic chamber. During operation these values are somewhat higher due to ambient conditions.
*2 : The values are for one indoor unit operation.
*3 : If a cooling operation is conducted when the outdoor air temperature is –5˚C or lower, the outdoor unit should be installed at a place where it is not influenced by natural wind. If wind blows, the low pressure will drop and compressor frequency will increase, this will cause the capacity to drop and may cause the unit to break down.

※ Powerful-Hi can be selected. Sound level: 71VNXPVF 39dB, 100VN(S)XPVF 39dB, 125VN(S)XPVF 46dB, 140VN(S)XPVF1 46dB, 140VN(S)XTVF 39dB
Air flow: 71VNXPVF 20m³/min, 100VN(S)XPVF 20m³/min, 125VN(S)XPVF 28m³/min, 140VN(S)XPVF1 28m³/min, 140VN(S)XTVF 20m³/min

SPECIFICATIONS

The values are for simultaneous Multi operation.

Set model name				Micro Inverter						
				FDT100VNPVF	FDT125VNPVF	FDT140VNPVF1	FDT140VNTVF	FDT100VSPVF	FDT125VSPVF	FDT140VSPVF1
				Twin			Triple	Twin		
Indoor unit				FDT50VF	FDT60VF	FDT71VF1	FDT50VF	FDT50VF	FDT60VF	FDT71VF1
Outdoor unit				FDC100VN	FDC125VN	FDC140VN	FDC140VN	FDC100VS	FDC125VS	FDC140VS
Power source				1 Phase 220-240V 50Hz, 1 Phase 220V 60Hz				3 Phase 380-415V 50Hz, 3 Phase 380V 60Hz		
Nominal cooling capacity (Min~Max)			kW	10.0 (4.0 ~ 11.2)	12.5 (5.0 ~ 14.0)	14.0 (5.0 ~ 14.5)	14.0 (5.0 ~ 14.5)	10.0 (4.0 ~ 11.2)	12.5 (5.0 ~ 14.0)	14.0 (5.0 ~ 14.5)
Nominal heating capacity (Min~Max)			kW	11.2 (4.0 ~ 12.5)	14.0 (4.0 ~ 16.0)	16.0 (4.0 ~ 16.5)	16.0 (4.0 ~ 16.5)	11.2 (4.0 ~ 12.5)	14.0 (4.0 ~ 16.0)	16.0 (4.0 ~ 16.5)
Power consumption		Cooling/Heating	kW	2.94 / 3.09	3.95 / 3.70	4.51 / 4.58	4.65 / 4.63	2.94 / 3.09	3.95 / 3.70	4.51 / 4.58
EER/COP		Cooling/Heating		3.40 / 3.62	3.16 / 3.78	3.10 / 3.49	3.01 / 3.46	3.40 / 3.62	3.16 / 3.78	3.10 / 3.49
Inrush current		220/230/240 V	A	5	5	5	5	5	5	5
Max. running current				24	24	24	24	15	15	15
Sound power level*1	Indoor*2	Cooling/Heating	dB(A)	55 / 55	60 / 60	64 / 64	55 / 55	55 / 55	60 / 60	64 / 64
	Outdoor	Cooling/Heating		70 / 70	72 / 72	73 / 73	73 / 73	70 / 70	72 / 72	73 / 73
Sound pressure level*1 ※	Indoor*2	Cooling (Hi/Me/Lo)		33 / 31 / 30	33 / 31 / 30	35 / 33 / 31	33 / 31 / 30	33 / 31 / 30	33 / 31 / 30	35 / 33 / 31
		Heating (Hi/Me/Lo)		33 / 31 / 30	33 / 31 / 30	35 / 33 / 31	33 / 31 / 30	33 / 31 / 30	33 / 31 / 30	35 / 33 / 31
	Outdoor	Cooling/Heating		49 / 49	50 / 51	51 / 51	51 / 51	49 / 49	50 / 51	51 / 51
Air flow ※	Indoor*2	Cooling (Hi/Me/Lo)	m^3/min	18 / 16 / 14	18 / 16 / 14	21 / 19 / 17	18 / 16 / 14	18 / 16 / 14	18 / 16 / 14	21 / 19 / 17
		Heating (Hi/Me/Lo)		18 / 16 / 14	18 / 16 / 14	21 / 19 / 17	18 / 16 / 14	18 / 16 / 14	18 / 16 / 14	21 / 19 / 17
	Outdoor	Cooling/Heating		75 / 73	75 / 73	75 / 73	75 / 73	75 / 73	75 / 73	75 / 73
Exterior dimensions	Indoor	HeightxWidthxDepth	mm	Unit: 246 x 840 x 840 Panel: 35 x 950 x 950						
	Outdoor			845 x 970 x 370						
Net weight	Indoor		kg	27.5(Unit:22 Panel:5.5)	29.5(Unit:24 Panel:5.5)		27.5(Unit:22 Panel:5.5)		29.5(Unit:24 Panel:5.5)	
	Outdoor			81				83		
Ref.piping size	Liquid/Gas		ømm	9.52(3/8") / 15.88(5/8")						
Refrigerant line (one way) length			m	Max.50						
Vertical height differences		Outdoor is higher/lower	m	Max.30 / Max.15						
Outdoor operating temperature range		Cooling	°C	-15~43*3						
		Heating		-20~20						
Panel				T-PSA-3BW-E						
Air filter, Q'ty				Pocket plastic net x 1(Washable)						
Remote control (option)				wired:RC-EX1A, RC-E5, RCH-E3 wireless:RCN-T-36W-E						

※ Powerful-Hi can be selected. Sound level: 100VN(S)PVF 39dB, 125VN(S)PVF 46dB, 140VN(S)PVF1 46dB, 140VNTVF 39dB
Air flow: 100VN(S)PVF 20m^3/min, 125VN(S)PVF 28m^3/min, 140VN(S)PVF1 28m^3/min, 140VNTVF 20m^3/min

SPECIFICATIONS

The values are for simultaneous Multi operation.

Set model name				Micro Inverter					
				FDT200VSPVF1	FDT250VSPVF	FDT140VSTVF	FDT200VSTVF1	FDT200VSDVF	FDT250VSDVF
				Twin		Triple		Double Twin	
Indoor unit				FDT100VF1	FDT125VF	FDT50VF	FDT71VF1	FDT50VF	FDT60VF
Outdoor unit				FDC200VS	FDC250VS	FDC140VS	FDC200VS	FDC200VS	FDC250VS
Power source				3 Phase 380-415V 50Hz, 3 Phase 380V 60Hz					
Nominal cooling capacity (Min~Max)			kW	20.0 (7.0 ~ 22.4)	25.0 (10.0 ~ 28.0)	14.0 (5.0 ~ 14.5)	20.0 (7.0 ~ 22.4)	20.0 (7.0 ~ 22.4)	25.0 (10.0 ~ 28.0)
Nominal heating capacity (Min~Max)			kW	22.4 (7.6 ~ 25.0)	28.0 (9.5 ~ 31.5)	16.0 (4.0 ~ 16.5)	22.4 (7.6 ~ 25.0)	22.4 (7.6 ~ 25.0)	28.0 (9.5 ~ 31.5)
Power consumption		Cooling/Heating	kW	6.58 / 6.02	8.30 / 7.75	4.65 / 4.63	6.49 / 6.12	6.58 / 6.15	8.28 / 7.70
EER/COP		Cooling/Heating		3.04 / 3.72	3.01 / 3.61	3.01 / 3.46	3.08 / 3.66	3.04 / 3.64	3.02 / 3.64
Inrush current		220/230/240 V	A	5	5	5	5	5	5
Max. running current				19	22	15	19	19	22
Sound power level*1	Indoor*2	Cooling/Heating	dB(A)	65 / 65	68 / 68	55 / 55	64 / 64	55 / 55	60 / 60
	Outdoor	Cooling/Heating		74 / 74	74 / 74	73 / 73	74 / 74	74 / 74	74 / 74
Sound pressure level*1 ※	Indoor*2	Cooling (Hi/Me/Lo)		40 / 37 / 35	42 / 40 / 37	33 / 31 / 30	35 / 33 / 31	33 / 31 / 30	33 / 31 / 30
		Heating (Hi/Me/Lo)		40 / 37 / 35	42 / 40 / 37	33 / 31 / 30	35 / 33 / 31	33 / 31 / 30	33 / 31 / 30
	Outdoor	Cooling/Heating		57 / 57	57 / 58	51 / 51	57 / 57	57 / 57	57 / 58
Air flow ※	Indoor*2	Cooling (Hi/Me/Lo)	m^3/min	27 / 24 / 20	30 / 27 / 23	18 / 16 / 14	21 / 19 / 17	18 / 16 / 14	18 / 16 / 14
		Heating (Hi/Me/Lo)		27 / 24 / 20	30 / 27 / 23	18 / 16 / 14	21 / 19 / 17	18 / 16 / 14	18 / 16 / 14
	Outdoor	Cooling/Heating		150 / 145	150 / 145	75 / 73	150 / 145	150 / 145	150 / 145
Exterior dimensions	Indoor	HeightxWidthxDepth	mm	Unit: 298 x 840 x 840	Panel: 35 x 950 x 950	Unit: 246 x 840 x 840 Panel: 35 x 950 x 950			
	Outdoor			1,300 x 970 x 370	1,505 x 970 x 370	845 x 970 x 370	1,300 x 970 x 370		1,505 x 970 x 370
Net weight	Indoor		kg	32.5(Unit:27 Panel:5.5)		27.5(Unit:22 Panel:5.5)	29.5(Unit:24 Panel:5.5)	27.5(Unit:22 Panel:5.5)	29.5(Unit:24 Panel:5.5)
	Outdoor			122	140	83	122		140
Ref.piping size	Liquid/Gas		ømm	9.52(3/8") / 22.22(7/8")	12.7(1/2") / 22.22(7/8")	9.52(3/8") / 15.88(5/8")	9.52(3/8") / 22.22(7/8")		12.7(1/2") / 22.22(7/8")
Refrigerant line (one way) length			m	Max.70		Max.50	Max.70		
Vertical height differences		Outdoor is higher/lower	m	Max.30 / Max.15					
Outdoor operating temperature range		Cooling	°C	-15~43*3					
		Heating		-15~20		-20~20	-15~20		
Panel				T-PSA-3BW-E					
Air filter, Q'ty				Pocket plastic net x 1(Washable)					
Remote control (option)				wired:RC-EX1A, RC-E5, RCH-E3 wireless:RCN-T-36W-E					

The data are measured under the following conditions(ISO-T1).
Cooling:Indoor temp. of 27˚CDB, 19˚CWB, and outdoor temp. of 35˚CDB. Heating:Indoor temp. of 20˚CDB, and outdoor temp. of 7˚CDB, 6˚CWB.
*1 : Indicates the value in an anechoic chamber. During operation these values are somewhat higher due to ambient conditions.
*2 : The values are for one indoor unit operation.
*3 : If a cooling operation is conducted when the outdoor air temperature is –5˚C or lower, the outdoor unit should be installed at a place where it is not influenced by natural wind. If wind blows, the low pressure will drop and compressor frequency will increase, this will cause the capacity to drop and may cause the unit to break down.

※ Powerful-Hi can be selected. Sound level: 200VSPVF1 51dB, 250VSPVF 51dB, 140VSTVF 39dB, 200VSTVF1 46dB, 200VSDVF 39dB, 250VSDVF 46dB
Air flow: 200VSPVF1 37m^3/min, 250VSPVF 37m^3/min, 140VSTVF 20m^3/min, 200VSTVF1 28m^3/min, 200VSDVF 20m^3/min, 250VSDVF 28m^3/min

CEILING CASSETTE -4way Compact (600 X 600mm)-

FDTC

R410A

Fits into standard 600 x 600 ceiling

FDTC 40/50/60

Remote control (Option)

Wired

RC-EX1A

RC-E5

RCH-E3

Wireless

RCN-TC-24W-ER

SPECIFICATIONS

The values are for simultaneous Multi operation.

Set model name				Hyper Inverter						
				FDTC71VNXPVF	FDTC100VNXPVF	FDTC125VNXPVF	FDTC140VNXTVF	FDTC100VSXPVF	FDTC125VSXPVF	FDTC140VSXTVF
				Twin			Triple	Twin		Triple
Indoor unit				FDTC40VF	FDTC50VF	FDTC60VF	FDTC50VF	FDTC50VF	FDTC60VF	FDTC50VF
Outdoor unit				FDC71VNX	FDC100VNX	FDC125VNX	FDC140VNX	FDC100VSX	FDC125VSX	FDC140VSX
Power source				1 Phase 220-240V 50Hz, 1 Phase 220V 60Hz				3 Phase 380-415V 50Hz, 3 Phase 380V 60Hz		
Nominal cooling capacity (Min~Max)			kW	7.1 (3.2 ~ 8.0)	10.0 (4.0 ~ 11.2)	12.5 (5.0 ~ 14.0)	14.0 (5.0 ~ 16.0)	10.0 (4.0 ~ 11.2)	12.5 (5.0 ~ 14.0)	14.0 (5.0 ~ 16.0)
Nominal heating capacity (Min~Max)			kW	8.0 (3.6 ~ 9.0)	11.2 (4.0 ~ 12.5)	14.0 (4.0 ~ 17.0)	16.0 (4.0 ~ 18.0)	11.2 (4.0 ~ 16.0)	14.0 (4.0 ~ 18.0)	16.0 (4.0 ~ 20.0)
Power consumption		Cooling/Heating	kW	2.04 / 2.21	3.18 / 3.20	4.10 / 4.10	4.34 / 4.34	3.18 / 3.20	4.10 / 4.10	4.34 / 4.34
EER/COP		Cooling/Heating		3.48 / 3.62	3.14 / 3.50	3.05 / 3.41	3.23 / 3.69	3.14 / 3.50	3.05 / 3.41	3.23 / 3.69
Inrush current		220/230/240 V	A	5	5	5	5	5	5	5
Max. running current				17	24	26	26	15	15	15
Sound power level*1	Indoor*2	Cooling/Heating	dB(A)	60 / 60	60 / 60	60 / 60	60 / 60	60 / 60	60 / 60	60 / 60
	Outdoor	Cooling/Heating		66 / 66	70 / 70	70 / 70	72 / 72	70 / 70	70 / 70	72 / 72
Sound pressure level*1 ※	Indoor*2	Cooling (Hi/Me/Lo)		42 / 36 / 30	42 / 36 / 30	46 / 39 / 30	42 / 36 / 30	42 / 36 / 30	46 / 39 / 30	42 / 36 / 30
		Heating (Hi/Me/Lo)		42 / 36 / 32	42 / 36 / 32	46 / 39 / 32	42 / 36 / 32	42 / 36 / 32	46 / 39 / 32	42 / 36 / 32
	Outdoor	Cooling/Heating		51 / 48	48 / 50	48 / 50	49 / 52	48 / 50	48 / 50	49 / 52
Air flow ※	Indoor*2	Cooling (Hi/Me/Lo)	m^3/min	11.5 / 9 / 7	11.5 / 9 / 7	13.5 / 10 / 7	11.5 / 9 / 7	11.5 / 9 / 7	13.5 / 10 / 7	11.5 / 9 / 7
		Heating (Hi/Me/Lo)		11.5 / 9 / 8	11.5 / 9 / 8	13.5 / 10 / 8	11.5 / 9 / 8	11.5 / 9 / 8	13.5 / 10 / 8	11.5 / 9 / 8
	Outdoor	Cooling/Heating		60 / 50	100 / 100	100 / 100	100 / 100	100 / 100	100 / 100	100 / 100
Exterior dimensions	Indoor	HeightxWidthxDepth	mm	Unit: 248 x 570 x 570 Panel: 35 x 700 x 700						
	Outdoor			750 x 880(+88) x 340	1,300 x 970 x 370					
Net weight	Indoor		kg	18.5(Unit:15 Panel:3.5)						
	Outdoor			60	105					
Ref.piping size	Liquid/Gas		ømm	9.52(3/8") / 15.88(5/8")						
Refrigerant line (one way) length			m	Max.50	Max.100					
Vertical height differences	Outdoor is higher/lower		m	Max.30 / Max.15						
Outdoor operating temperature range	Cooling		°C	-15~43*3						
	Heating			-20~20						
Panel				TC-PSA-25W-E						
Air filter, Q'ty				Pocket plastic net x 1(Washable)						
Remote control (option)				wired:RC-EX1A, RC-E5, RCH-E3 wireless:RCN-TC-24W-ER						

The data are measured under the following conditions(ISO-T1).
Cooling:Indoor temp. of 27˚CDB, 19˚CWB, and outdoor temp. of 35˚CDB. Heating:Indoor temp. of 20˚CDB, and outdoor temp. of 7˚CDB, 6˚CWB.
*1 : Indicates the value in an anechoic chamber. During operation these values are somewhat higher due to ambient conditions.
*2 : The values are for one indoor unit operation.
*3 : If a cooling operation is conducted when the outdoor air temperature is –5˚C or lower, the outdoor unit should be installed at a place where it is not influenced by natural wind. If wind blows, the low pressure will drop and compressor frequency will increase, this will cause the capacity to drop and may cause the unit to break down.

※ Powerful-Hi can be selected. Sound level: 71VNXPVF 47dB, 100/125VN(S)XPVF 47dB, 140VN(S)XTVF 47dB
Air flow: 71VNXPVF 13.5m^3/min, 100/125VN(S)XPVF 13.5m^3/min, 140VN(S)XTVF 13.5m^3/min

SPECIFICATIONS

The values are for simultaneous Multi operation.

Set model name				Micro Inverter		
				FDTC100VNPVF	FDTC125VNPVF	FDTC140VNTVF
				Twin		Triple
Indoor unit				FDTC50VF	FDTC60VF	FDTC50VF
Outdoor unit				FDC100VN	FDC125VN	FDC140VN
Power source				1 Phase 220-240V 50Hz, 1 Phase 220V 60Hz		
Nominal cooling capacity (Min~Max)			kW	10.0 (4.0 ~ 11.2)	12.5 (5.0 ~ 14.0)	14.0 (5.0 ~ 14.5)
Nominal heating capacity (Min~Max)			kW	11.2 (4.0 ~ 12.5)	14.0 (4.0 ~ 16.0)	16.0 (4.0 ~ 16.5)
Power consumption		Cooling/Heating	kW	3.25 / 3.26	5.35 / 4.62	4.64 / 4.52
EER/COP		Cooling/Heating		3.08 / 3.44	2.34 / 3.03	3.02 / 3.54
Inrush current		220/230/240 V	A	5	5	5
Max. running current				24	24	24
Sound power level*1	Indoor*2	Cooling/Heating	dB(A)	60 / 60	60 / 60	60 / 60
	Outdoor	Cooling/Heating		70 / 70	72 / 72	73 / 73
Sound pressure level*1 ※	Indoor*2	Cooling (Hi/Me/Lo)		42 / 36 / 30	46 / 39 / 30	42 / 36 / 30
		Heating (Hi/Me/Lo)		42 / 36 / 32	46 / 39 / 32	42 / 36 / 32
	Outdoor	Cooling/Heating		49 / 49	50 / 51	51 / 51
Air flow ※	Indoor*2	Cooling (Hi/Me/Lo)	m^3/min	11.5 / 9 / 7	13.5 / 10 / 7	11.5 / 9 / 7
		Heating (Hi/Me/Lo)		11.5 / 9 / 8	13.5 / 10 / 8	11.5 / 9 / 8
	Outdoor	Cooling/Heating		75 / 73	75 / 73	75 / 73
Exterior dimensions	Indoor	HeightxWidthxDepth	mm	Unit: 248 x 570 x 570 Panel: 35 x 700 x 700		
	Outdoor			845 x 970 x 370		
Net weight	Indoor		kg	18.5(Unit:15 Panel:3.5)		
	Outdoor			81		
Ref.piping size	Liquid/Gas		ømm	9.52(3/8") / 15.88(5/8")		
Refrigerant line (one way) length			m	Max.50		
Vertical height differences		Outdoor is higher/lower	m	Max.30 / Max.15		
Outdoor operating temperature range		Cooling	°C	-15~43*3		
		Heating		-20~20		
Panel				TC-PSA-25W-E		
Air filter, Q'ty				Pocket plastic net x 1(Washable)		
Remote control (option)				wired:RC-EX1A, RC-E5, RCH-E3 wireless:RCN-TC-24W-ER		

SPECIFICATIONS

The values are for simultaneous Multi operation.

Set model name				Micro Inverter				
				FDTC100VSPVF	FDTC125VSPVF	FDTC140VSTVF	FDTC200VSDVF	FDTC250VSDVF
				Twin		Triple	Double Twin	
Indoor unit				FDTC50VF	FDTC60VF	FDTC50VF	FDTC50VF	FDTC60VF
Outdoor unit				FDC100VS	FDC125VS	FDC140VS	FDC200VS	FDC250VS
Power source				3 Phase 380-415V 50Hz, 3 Phase 380V 60Hz				
Nominal cooling capacity (Min~Max)			kW	10.0 (4.0 ~ 11.2)	12.5 (5.0 ~ 14.0)	14.0 (5.0 ~ 14.5)	20.0 (7.0 ~ 22.4)	25.0 (10.0 ~ 28.0)
Nominal heating capacity (Min~Max)			kW	11.2 (4.0 ~ 12.5)	14.0 (4.0 ~ 16.0)	16.0 (4.0 ~ 16.5)	22.4 (7.6 ~ 25.0)	28.0 (9.5 ~ 31.5)
Power consumption		Cooling/Heating	kW	3.25 / 3.26	5.35 / 4.62	4.64 / 4.52	7.33 / 6.98	11.28 / 10.19
EER/COP		Cooling/Heating		3.08 / 3.44	2.34 / 3.03	3.02 / 3.54	2.73 / 3.21	2.22 / 2.75
Inrush current		220/230/240 V	A	5	5	5	5	5
Max. running current				15	15	15	19	22
Sound power level*1	Indoor*2	Cooling/Heating	dB(A)	60 / 60	60 / 60	60 / 60	60 / 60	60 / 60
	Outdoor	Cooling/Heating		70 / 70	72 / 72	73 / 73	74 / 74	74 / 74
Sound pressure level*1 ※	Indoor*2	Cooling (Hi/Me/Lo)		42 / 36 / 30	46 / 39 / 30	42 / 36 / 30	42 / 36 / 30	46 / 39 / 30
		Heating (Hi/Me/Lo)		42 / 36 / 32	46 / 39 / 32	42 / 36 / 32	42 / 36 / 32	46 / 39 / 32
	Outdoor	Cooling/Heating		49 / 49	50 / 51	51 / 51	57 / 57	57 / 58
Air flow ※	Indoor*2	Cooling (Hi/Me/Lo)	m^3/min	11.5 / 9 / 7	13.5 / 10 / 7	11.5 / 9 / 7	11.5 / 9 / 7	13.5 / 10 / 7
		Heating (Hi/Me/Lo)		11.5 / 9 / 8	13.5 / 10 / 8	11.5 / 9 / 8	11.5 / 9 / 8	13.5 / 10 / 8
	Outdoor	Cooling/Heating		75 / 73	75 / 73	75 / 73	150 / 145	150 / 145
Exterior dimensions	Indoor	HeightxWidthxDepth	mm	Unit: 248 x 570 x 570 Panel: 35 x 700 x 700				
	Outdoor			845 x 970 x 370			1,300 x 970 x 370	1,505 x 970 x 370
Net weight	Indoor		kg	18.5(Unit:15 Panel:3.5)				
	Outdoor			83			122	140
Ref.piping size	Liquid/Gas		ømm	9.52(3/8") / 15.88(5/8")			9.52(3/8") / 22.22(7/8")	12.7(1/2") / 22.22(7/8")
Refrigerant line (one way) length			m	Max.50			Max.70	
Vertical height differences		Outdoor is higher/lower	m	Max.30 / Max.15				
Outdoor operating temperature range		Cooling	°C	-15~43*3				
		Heating		-20~20			-15~20	
Panel				TC-PSA-25W-E				
Air filter, Q'ty				Pocket plastic net x 1(Washable)				
Remote control (option)				wired:RC-EX1A, RC-E5, RCH-E3 wireless:RCN-TC-24W-ER				

The data are measured under the following conditions(ISO-T1).
Cooling:Indoor temp. of 27˚CDB, 19˚CWB, and outdoor temp. of 35˚CDB. Heating:Indoor temp. of 20˚CDB, and outdoor temp. of 7˚CDB, 6˚CWB.
*1 : Indicates the value in an anechoic chamber. During operation these values are somewhat higher due to ambient conditions.
*2 : The values are for one indoor unit operation.
*3 : If a cooling operation is conducted when the outdoor air temperature is –5˚C or lower, the outdoor unit should be installed at a place where it is not influenced by natural wind. If wind blows, the low pressure will drop and compressor frequency will increase, this will cause the capacity to drop and may cause the unit to break down.

※ Powerful-Hi can be selected. Sound level: 100/125VN(S)PVF 47dB, 140VN(S)TVF 47dB, 200/250VSDVF 47dB
Air flow: 100/125VN(S)PVF 13.5m^3/min, 140VN(S)TVF 13.5m^3/min, 200/250VSDVF 13.5m^3/min

DUCT CONNECTED -Low/Middle Static pressure-

FDUM

FDUM 50/60/71/ 100/125

external static pressure loss:5Pa

Filter kit (option)
UM-FL1EF : for 50
UM-FL2EF : for 60, 71
UM-FL3EF : for 100, 125

Remote control (Option)

Wired

RC-EX1A

RC-E5

RCH-E3

Wireless

RCN-KIT3-E

SPECIFICATIONS

The values are for simultaneous Multi operation.

				Hyper Inverter	
Set model name				FDUM71VNXPVF	FDUM100VNXPVF
				Twin	
Indoor unit				FDUM40VF	FDUM50VF
Outdoor unit				FDC71VNX	FDC100VNX
Power source				1 Phase 220-240V 50Hz, 1 Phase 220V 60Hz	
Nominal cooling capacity (Min~Max)			kW	7.1 (3.2 ~ 8.0)	10.0 (4.0 ~ 11.2)
Nominal heating capacity (Min~Max)			kW	8.0 (3.6 ~ 9.0)	11.2 (4.0 ~ 12.5)
Power consumption		Cooling/Heating	kW	2.01 / 1.91	2.66 / 3.02
EER/COP		Cooling/Heating		3.53 / 4.19	3.76 / 3.71
Inrush current		220/230/240 V	A	5	5
Max. running current				17	24
Sound power level*1	Indoor*2	Cooling/Heating	dB(A)	60 / 60	60 / 60
	Outdoor	Cooling/Heating		66 / 66	70 / 70
Sound pressure level*1 ※	Indoor*2	Cooling (Hi/Me/Lo)		39 / 29 / 26	32 / 29 / 26
		Heating (Hi/Me/Lo)		39 / 29 / 26	32 / 29 / 26
	Outdoor	Cooling/Heating		51 / 48	48 / 50
Air flow ※	Indoor*2	Cooling (Hi/Me/Lo)	m³/min	10 / 9 / 8	10 / 9 / 8
		Heating (Hi/Me/Lo)		10 / 9 / 8	10 / 9 / 8
	Outdoor	Cooling/Heating		60 / 50	100 / 100
External static pressure*3			Pa	Standard:35 Max:100	
Exterior dimensions	Indoor	HeightxWidthxDepth	mm	280 x 750 x 635	280 x 750 x 635
	Outdoor			750 x 880 x 340	1,300 x 970 x 370
Net weight	Indoor		kg	29	29
	Outdoor			60	105
Ref.piping size	Liquid/Gas		ømm	9.52(3/8") / 15.88(5/8")	
Refrigerant line (one way) length			m	Max.50	Max.100
Vertical height differences	Outdoor is higher/lower		m	Max.30 / Max.15	
Outdoor operating temperature range	Cooling		℃	-15~43*4	
	Heating			-20~20	
Air filter				Filter kit : UM-FL1EF/UM-FL2EF (option)	
Remote control (option)				wired:RC-EX1A, RC-E5, RCH-E3 wireless:RCN-KIT3-E	

SPECIFICATIONS

The values are for simultaneous Multi operation.

				Hyper Inverter						
Set model name				FDUM125VNXPVF	FDUM140VNXPVF1	FDUM140VNXTVF	FDUM100VSXPVF	FDUM125VSXPVF	FDUM140VSXPVF1	FDUM140VSXTVF
				Twin		Triple	Twin			Triple
Indoor unit				FDUM60VF	FDUM71VF1	FDUM50VF	FDUM50VF	FDUM60VF	FDUM71VF1	FDUM50VF
Outdoor unit				FDC125VNX	FDC140VNX	FDC140VNX	FDC100VSX	FDC125VSX	FDC140VSX	FDC140VSX
Power source				1 Phase 220-240V 50Hz, 1 Phase 220V 60Hz			3 Phase 380-415V 50Hz, 3Phase 380V 60Hz			
Nominal cooling capacity (Min~Max)			kW	12.5 (5.0 ~ 14.0)	14.0 (5.0 ~ 16.0)	14.0 (5.0 ~ 16.0)	10.0 (4.0 ~ 11.2)	12.5 (5.0 ~ 14.0)	14.0 (5.0 ~ 16.0)	14.0 (5.0 ~ 16.0)
Nominal heating capacity (Min~Max)			kW	14.0 (4.0 ~ 17.0)	16.0 (4.0 ~ 18.0)	16.0 (4.0 ~ 18.0)	11.2 (4.0 ~ 16.0)	14.0 (4.0 ~ 18.0)	16.0 (4.0 ~ 20.0)	16.0 (4.0 ~ 20.0)
Power consumption		Cooling/Heating	kW	3.26 / 3.66	4.36 / 4.35	4.21 / 4.69	2.66 / 3.02	3.26 / 3.66	4.36 / 4.35	4.21 / 4.69
EER/COP		Cooling/Heating		3.83 / 3.83	3.21 / 3.68	3.33 / 3.41	3.76 / 3.71	3.83 / 3.83	3.21 / 3.68	3.33 / 3.41
Inrush current		220/230/240 V	A	5	5	5	5	5	5	5
Max. running current				26	26	26	15	15	15	15
Sound power level*1	Indoor*2	Cooling/Heating	dB(A)	60 / 60	65 / 65	60 / 60	60 / 60	60 / 60	65 / 65	60 / 60
	Outdoor	Cooling/Heating		70 / 70	72 / 72	72 / 72	70 / 70	70 / 70	72 / 72	72 / 72
Sound pressure level*1 ※	Indoor*2	Cooling (Hi/Me/Lo)		31 / 28 / 25	33 / 29 / 25	32 / 29 / 26	32 / 29 / 26	31 / 28 / 25	33 / 29 / 25	32 / 29 / 26
		Heating (Hi/Me/Lo)		31 / 28 / 25	33 / 29 / 25	32 / 29 / 26	32 / 29 / 26	31 / 28 / 25	33 / 29 / 25	32 / 29 / 26
	Outdoor	Cooling/Heating		48 / 50	49 / 52	49 / 52	48 / 50	48 / 50	49 / 52	49 / 52
Air flow ※	Indoor*2	Cooling (Hi/Me/Lo)	m³/min	15 / 13 / 10	19 / 15 / 10	10 / 9 / 8	10 / 9 / 8	15 / 13 / 10	19 / 15 / 10	10 / 9 / 8
		Heating (Hi/Me/Lo)		15 / 13 / 10	19 / 15 / 10	10 / 9 / 8	10 / 9 / 8	15 / 13 / 10	19 / 15 / 10	10 / 9 / 8
	Outdoor	Cooling/Heating		100 / 100	100 / 100	100 / 100	100 / 100	100 / 100	100 / 100	100 / 100
External static pressure*3			Pa	Standard:35 Max:100						
Exterior dimensions	Indoor	HeightxWidthxDepth	mm	280 x 950 x 635	280 x 950 x 635	280 x 750 x 635		280 x 950 x 635		280 x 750 x 635
	Outdoor			1,300 x 970 x 370						
Net weight	Indoor		kg	34		29		34		29
	Outdoor			105						
Ref.piping size	Liquid/Gas		ømm	9.52(3/8") / 15.88(5/8")						
Refrigerant line (one way) length			m	Max.100						
Vertical height differences	Outdoor is higher/lower		m	Max.30 / Max.15						
Outdoor operating temperature range	Cooling		℃	-15~43*4						
	Heating			-20~20						
Air filter				Filter kit : UM-FL1EF/UM-FL2EF (option)						
Remote control (option)				wired:RC-EX1A, RC-E5, RCH-E3 wireless:RCN-KIT3-E						

The data are measured under the following conditions(ISO-T1).
Cooling:Indoor temp. of 27˚CDB, 19˚CWB, and outdoor temp. of 35˚CDB. Heating:Indoor temp. of 20˚CDB, and outdoor temp. of 7˚CDB, 6˚CWB.
External static pressure is 35Pa.

*1 : Indicates the value in an anechoic chamber. During operation these values are somewhat higher due to ambient conditions.
*2 : The values are for one indoor unit operation.
*3 : External static pressure is changeable to be set by the remote control. MAX external static pressure is "High static pressure" setting. The values of sound pressure level become 5dB(A) higher at external static pressure of 100Pa.
*4 : If a cooling operation is conducted when the outdoor air temperature is –5˚C or lower, the outdoor unit should be installed at a place where it is not influenced by natural wind. If wind blows, the low pressure will drop and compressor frequency will increase, this will cause the capacity to drop and may cause the unit to break down.

※ Powerful-Hi can be selected. Sound level: 71VNXPVF/100VN(S)XPVF 37dB, 125VN(S)XPVF 36dB, 140VN(S)XPVF1 38dB, 140VN(S)XTVF 37dB
Air flow: 71VNXPVF/100VN(S)XPVF 13m³/min, 125VN(S)XPVF 20m³/min, 140VN(S)XPVF1 24m³/min, 140VN(S)XTVF 13m³/min

SPECIFICATIONS The values are for simultaneous Multi operation.

Set model name				Micro Inverter				
				FDUM100VNPVF	FDUM125VNPVF	FDUM140VNPVF1	FDUM140VNTVF	FDUM100VSPVF
				Twin			Triple	Twin
Indoor unit				FDUM50VF	FDUM60VF	FDUM71VF1	FDUM50VF	FDUM50VF
Outdoor unit				FDC100VN	FDC125VN	FDC140VN	FDC140VN	FDC100VS
Power source				1 Phase 220-240V 50Hz, 1 Phase 220V 60Hz				3 Phase 380-415V 50Hz, 3Phase 380V 60Hz
Nominal cooling capacity (Min~Max)			kW	10.0 (4.0 ~ 11.2)	12.5 (5.0 ~ 14.0)	14.0 (5.0 ~ 14.5)	14.0 (5.0 ~ 14.5)	10.0 (4.0 ~ 11.2)
Nominal heating capacity (Min~Max)			kW	11.2 (4.0 ~ 12.5)	14.0 (4.0 ~ 16.0)	16.0 (4.0 ~ 16.5)	16.0 (4.0 ~ 16.5)	11.2 (4.0 ~ 12.5)
Power consumption		Cooling/Heating	kW	2.84 / 3.35	3.87 / 4.07	4.78 / 4.60	4.65 / 5.15	2.84 / 3.35
EER/COP		Cooling/Heating		3.52 / 3.34	3.23 / 3.44	2.93 / 3.48	3.01 / 3.11	3.52 / 3.34
Inrush current		220/230/240 V	A	5	5	5	5	5
Max. running current				24	24	24	15	15
Sound power level*1	Indoor*2	Cooling/Heating	dB(A)	60 / 60	60 / 60	65 / 65	60 / 60	60 / 60
	Outdoor	Cooling/Heating		70 / 70	72 / 72	73 / 73	73 / 73	70 / 70
Sound pressure level*1 ※	Indoor*2	Cooling (Hi/Me/Lo)		32 / 29 / 26	31 / 28 / 25	33 / 29 / 25	32 / 29 / 26	32 / 29 / 26
		Heating (Hi/Me/Lo)		32 / 29 / 26	31 / 28 / 25	33 / 29 / 25	32 / 29 / 26	32 / 29 / 26
	Outdoor	Cooling/Heating		49 / 49	50 / 51	51 / 51	51 / 51	49 / 49
Air flow ※	Indoor*2	Cooling (Hi/Me/Lo)	m³/min	10 / 9 / 8	15 / 13 / 10	19 / 15 / 10	10 / 9 / 8	10 / 9 / 8
		Heating (Hi/Me/Lo)		10 / 9 / 8	15 / 13 / 10	19 / 15 / 10	10 / 9 / 8	10 / 9 / 8
	Outdoor	Cooling/Heating		75 / 73	75 / 73	75 / 73	75 / 73	75 / 73
External static pressure*3			Pa	Standard:35 Max:100				
Exterior dimensions	Indoor	HeightxWidthxDepth	mm	280 x 750 x 635	280 x 950 x 635		280 x 750 x 635	
	Outdoor			845 x 970 x 370				
Net weight	Indoor		kg	29	34		29	
	Outdoor			81				83
Ref.piping size	Liquid/Gas		ømm	9.52(3/8") / 15.88(5/8")				
Refrigerant line (one way) length			m	Max.50				
Vertical height differences	Outdoor is higher/lower		m	Max.30 / Max.15				
Outdoor operating temperature range	Cooling		°C	-15~43*4				
	Heating			-20~20				
Air filter				Filter kit : UM-FL1EF/UM-FL2EF (option)				
Remote control (option)				wired:RC-EX1A, RC-E5, RCH-E3 wireless:RCN-KIT3-E				

※ Powerful-Hi can be selected. Sound level: 100VN(S)PVF 37dB, 125VNPVF 36dB, 140VNPVF1 38dB, 140VNTVF 37dB
Air flow: 100VN(S)PVF 13m³/min, 125VNPVF 20m³/min, 140VNPVF1 24m³/min, 140VNTVF 13m³/min

SPECIFICATIONS The values are for simultaneous Multi operation.

Set model name				Micro Inverter					
				FDUM125VSPVF	FDUM140VSPVF1	FDUM200VSPVF1	FDUM250VSPVF	FDUM140VSTVF	FDUM200VSTVF1
				Twin				Triple	
Indoor unit				FDUM60VF	FDUM71VF1	FDUM100VF1	FDUM125VF	FDUM50VF	FDUM71VF1
Outdoor unit				FDC125VS	FDC140VS	FDC200VS	FDC250VS	FDC140VS	FDC200VS
Power source				3 Phase 380-415V 50Hz, 3 Phase 380V 60Hz					
Nominal cooling capacity (Min~Max)			kW	12.5 (5.0 ~ 14.0)	14.0 (5.0 ~ 14.5)	20.0 (7.0 ~ 22.4)	25.0 (10.0 ~ 28.0)	14.0 (5.0 ~ 14.5)	20.0 (7.0 ~ 22.4)
Nominal heating capacity (Min~Max)			kW	14.0 (4.0 ~ 16.0)	16.0 (4.0 ~ 16.5)	22.4 (7.6 ~ 25.0)	28.0 (9.5 ~ 31.5)	16.0 (4.0 ~ 16.5)	22.4 (7.6 ~ 25.0)
Power consumption		Cooling/Heating	kW	3.87 / 4.07	4.78 / 4.60	6.86 / 7.22	9.05 / 8.51	4.65 / 5.15	6.57 / 6.26
EER/COP		Cooling/Heating		3.23 / 3.44	2.93 / 3.48	2.92 / 3.10	2.76 / 3.29	3.01 / 3.11	3.04 / 3.58
Inrush current		220/230/240 V	A	5	5	5	5	5	5
Max. running current				15	15	19	22	15	19
Sound power level*1	Indoor*2	Cooling/Heating	dB(A)	60 / 60	65 / 65	65 / 65	67 / 67	60 / 60	65 / 65
	Outdoor	Cooling/Heating		72 / 72	73 / 73	74 / 74	74 / 74	73 / 73	74 / 74
Sound pressure level*1 ※	Indoor*2	Cooling (Hi/Me/Lo)		31 / 28 / 25	33 / 29 / 25	38 / 36 / 30	40 / 34 / 29	32 / 29 / 26	33 / 29 / 25
		Heating (Hi/Me/Lo)		31 / 28 / 25	33 / 29 / 25	38 / 36 / 30	40 / 34 / 29	32 / 29 / 26	33 / 29 / 25
	Outdoor	Cooling/Heating		50 / 51	51 / 51	57 / 57	57 / 58	51 / 51	57 / 57
Air flow ※	Indoor*2	Cooling (Hi/Me/Lo)	m³/min	15 / 13 / 10	19 / 15 / 10	28 / 25 / 19	32 / 26 / 20	10 / 9 / 8	19 / 15 / 10
		Heating (Hi/Me/Lo)		15 / 13 / 10	19 / 15 / 10	28 / 25 / 19	32 / 26 / 20	10 / 9 / 8	19 / 15 / 10
	Outdoor	Cooling/Heating		75 / 73	75 / 73	150 / 145	150 / 145	75 / 73	150 / 145
External static pressure*3			Pa	Standard:35 Max:100		Standard:60 Max:100		Standard:35 Max:100	Standard:35 Max:100
Exterior dimensions	Indoor	HeightxWidthxDepth	mm	280 x 950 x 635		280 x 1,370 x 740		280 x 750 x 635	280 x 950 x 635
	Outdoor			845 x 970 x 370		1,300 x 970 x 370	1,505 x 970 x 370	845 x 970 x 370	1,300 x 970 x 370
Net weight	Indoor		kg	34		54		29	34
	Outdoor			83		122	140	83	122
Ref.piping size	Liquid/Gas		ømm	9.52(3/8") / 15.88(5/8")		9.52(3/8") / 22.22(7/8")	12.7(1/2") / 22.22(7/8")	9.52(3/8") / 15.88(5/8")	9.52(3/8") / 22.22(7/8")
Refrigerant line (one way) length			m	Max.50		Max.70		Max.50	Max.70
Vertical height differences	Outdoor is higher/lower		m	Max.30 / Max.15					
Outdoor operating temperature range	Cooling		°C	-15~43*4					
	Heating			-20~20		-15~20		-20~20	-15~20
Air filter				Filter kit : UM-FL1EF/UM-FL2EF/UM-FL3EF (option)					
Remote control (option)				wired:RC-EX1A, RC-E5, RCH-E3 wireless:RCN-KIT3-E					

The data are measured under the following conditions(ISO-T1).
Cooling:Indoor temp. of 27˚CDB, 19˚CWB, and outdoor temp. of 35˚CDB. Heating:Indoor temp. of 20˚CDB, and outdoor temp. of 7˚CDB, 6˚CWB. External static pressure is 35Pa (50/60/71), 60Pa (100/125).
*1 : Indicates the value in an anechoic chamber. During operation these values are somewhat higher due to ambient conditions.
*2 : The values are for one indoor unit operation.
*3 : External static pressure is changeable to be set by the remote control. MAX external static pressure is "High static pressure" setting. The values of sound pressure level become 5dB(A) higher at external static pressure of 100Pa.
*4 : If a cooling operation is conducted when the outdoor air temperature is –5˚C or lower, the outdoor unit should be installed at a place where it is not influenced by natural wind. If wind blows, the low pressure will drop and compressor frequency will increase, this will cause the capacity to drop and may cause the unit to break down.

※ Powerful-Hi can be selected. Sound level: 125VSPVF 36dB, 140VSPVF1 38dB, 200VSPVF1 44dB, 250VSPVF 45dB, 140VSTVF 37dB, 200VSTVF1 38dB
Air flow: 125VSPVF 20m³/min, 140VSPVF1 24m³/min, 200VSPVF1 36m³/min, 250VSPVF 39m³/min, 140VSTVF 13m³/min, 200VSTVF1 24m³/min

CEILING SUSPENDED

FDEN

FDEN 40/50/60/71/100/125

Remote control (Option)

Wired

RC-EX1A

RC-E5

RCH-E3

Wireless

RCN-E1R

SPECIFICATIONS

The values are for simultaneous Multi operation.

				Hyper Inverter	
Set model name				FDEN71VNXPVF	FDEN100VNXPVF
				Twin	
Indoor unit				FDEN40VF	FDEN50VF
Outdoor unit				FDC71VNX	FDC100VNX
Power source				1 Phase 220-240V 50Hz, 1 Phase 220V 60Hz	
Nominal cooling capacity (Min~Max)			kW	7.1 (3.2 ~ 8.0)	10.0 (4.0 ~ 11.2)
Nominal heating capacity (Min~Max)			kW	8.0 (3.6 ~ 9.0)	11.2 (4.0 ~ 12.5)
Power consumption		Cooling/Heating	kW	2.08 / 2.40	3.02 / 3.49
EER/COP		Cooling/Heating		3.41 / 3.33	3.31 / 3.21
Inrush current		220/230/240 V	A	5	5
Max. running current				17	24
Sound power level*1	Indoor*2	Cooling/Heating	dB(A)	60 / 60	60 / 60
	Outdoor	Cooling/Heating		66 / 66	70 / 70
Sound pressure level*1 ※	Indoor*2	Cooling (Hi/Me/Lo)		39 / 38 / 37	39 / 38 / 37
		Heating (Hi/Me/Lo)		39 / 38 / 37	39 / 38 / 37
	Outdoor	Cooling/Heating		51 / 48	48 / 50
Air flow ※	Indoor*2	Cooling (Hi/Me/Lo)	m³/min	10 / 9 / 7	10 / 9 / 7
		Heating (Hi/Me/Lo)		10 / 9 / 7	10 / 9 / 7
	Outdoor	Cooling/Heating		60 / 50	100 / 100
Exterior dimensions	Indoor	HeightxWidthxDepth	mm	210 x 1,070 x 690	
	Outdoor			750 x 880(+88) x 340	1,300 x 970 x 370
Net weight	Indoor		kg	28	
	Outdoor			60	105
Ref.piping size	Liquid/Gas		ømm	9.52(3/8") / 15.88(5/8")	
Refrigerant line (one way) length			m	Max. 50	Max. 100
Vertical height differences	Outdoor is higher/lower		m	Max.30 / Max.15	
Outdoor operating temperature range	Cooling		℃	-15~43*3	
	Heating			-20~20	
Air filter, Q'ty				Pocket plastic net x 2(Washable)	
Remote control (option)				wired:RC-EX1A, RC-E5, RCH-E3 wireless:RCN-E1R	

SPECIFICATIONS

The values are for simultaneous Multi operation.

				Hyper Inverter						
Set model name				FDEN125VNXPVF	FDEN140VNXPVF1	FDEN140VNXTVF	FDEN100VSXPVF	FDEN125VSXPVF	FDEN140VSXPVF1	FDEN140VSXTVF
				Twin		Triple	Twin			Triple
Indoor unit				FDEN60VF	FDEN71VF1	FDEN50VF	FDEN50VF	FDEN60VF	FDEN71VF1	FDEN50VF
Outdoor unit				FDC125VNX	FDC140VNX	FDC140VNX	FDC100VSX	FDC125VSX	FDC140VSX	FDC140VSX
Power source				1 Phase 220-240V 50Hz, 1 Phase 220V 60Hz			3 Phase 380-415V 50Hz, 3 Phase 380V 60Hz			
Nominal cooling capacity (Min~Max)			kW	12.5 (5.0 ~ 14.0)	14.0 (5.0 ~ 16.0)	14.0 (5.0 ~ 16.0)	10.0 (4.0 ~ 11.2)	12.5 (5.0 ~ 14.0)	14.0 (5.0 ~ 16.0)	14.0 (5.0 ~ 16.0)
Nominal heating capacity (Min~Max)			kW	14.0 (4.0 ~ 17.0)	16.0 (4.0 ~ 18.0)	16.0 (4.0 ~ 18.0)	11.2 (4.0 ~ 16.0)	14.0 (4.0 ~ 18.0)	16.0 (4.0 ~ 20.0)	16.0 (4.0 ~ 20.0)
Power consumption		Cooling/Heating	kW	4.06 / 3.70	4.96 / 4.58	4.90 / 4.53	3.02 / 3.49	4.06 / 3.70	4.96 / 4.58	4.90 / 4.53
EER/COP		Cooling/Heating		3.08 / 3.78	2.82 / 3.49	2.86 / 3.53	3.31 / 3.21	3.08 / 3.78	2.82 / 3.49	2.86 / 3.53
Inrush current		220/230/240 V	A	5	5	5	5	5	5	5
Max. running current				26	26	26	15	15	15	15
Sound power level*1	Indoor*2	Cooling/Heating	dB(A)	60 / 60	62 / 62	60 / 60	60 / 60	60 / 60	62 / 62	60 / 60
	Outdoor	Cooling/Heating		70 / 70	72 / 72	72 / 72	70 / 70	70 / 70	72 / 72	72 / 72
Sound pressure level*1 ※	Indoor*2	Cooling (Hi/Me/Lo)		41 / 39 / 38	41 / 39 / 38	39 / 38 / 37	39 / 38 / 37	41 / 39 / 38	41 / 39 / 38	39 / 38 / 37
		Heating (Hi/Me/Lo)		41 / 39 / 38	41 / 39 / 38	39 / 38 / 37	39 / 38 / 37	41 / 39 / 38	41 / 39 / 38	39 / 38 / 37
	Outdoor	Cooling/Heating		48 / 50	49 / 52	49 / 52	48 / 50	48 / 50	49 / 52	49 / 52
Air flow ※	Indoor*2	Cooling (Hi/Me/Lo)	m³/min	16 / 14 / 12	16 / 14 / 12	10 / 9 / 7	10 / 9 / 7	16 / 14 / 12	16 / 14 / 12	10 / 9 / 7
		Heating (Hi/Me/Lo)		16 / 14 / 12	16 / 14 / 12	10 / 9 / 7	10 / 9 / 7	16 / 14 / 12	16 / 14 / 12	10 / 9 / 7
	Outdoor	Cooling/Heating		100 / 100	100 / 100	100 / 100	100 / 100	100 / 100	100 / 100	100 / 100
Exterior dimensions	Indoor	HeightxWidthxDepth	mm	210 x 1,320 x 690		210 x 1,070 x 690		210 x 1,320 x 690		210 x 1,070 x 690
	Outdoor			1,300 x 970 x 370						
Net weight	Indoor		kg	37		28		37		28
	Outdoor			105						
Ref.piping size	Liquid/Gas		ømm	9.52(3/8") / 15.88(5/8")						
Refrigerant line (one way) length			m	Max.100						
Vertical height differences	Outdoor is higher/lower		m	Max.30 / Max.15						
Outdoor operating temperature range	Cooling		℃	-15~43*3						
	Heating			-20~20						
Air filter, Q'ty				Pocket plastic net x 2(Washable)						
Remote control (option)				wired:RC-EX1A, RC-E5, RCH-E3 wireless:RCN-E1R						

The data are measured under the following conditions(ISO-T1).
Cooling:Indoor temp. of 27˚CDB, 19˚CWB, and outdoor temp. of 35˚CDB. Heating:Indoor temp. of 20˚CDB, and outdoor temp. of 7˚CDB, 6˚CWB.
*1 : Indicates the value in an anechoic chamber. During operation these values are somewhat higher due to ambient conditions.
*2 : The values are for one indoor unit operation.
*3 : If a cooling operation is conducted when the outdoor air temperature is –5˚C or lower, the outdoor unit should be installed at a place where it is not influenced by natural wind. If wind blows, the low pressure will drop and compressor frequency will increase, this will cause the capacity to drop and may cause the unit to break down.

※ Powerful-Hi can be selected. Sound level: 71VNXPVF 46dB, 100VN(S)XPVF 46dB, 125VN(S)XPVF 48dB, 140VN(S)XPVF1 50dB, 140VN(S)XTVF 46dB
Air flow: 71VNXPVF 11m³/min, 100VN(S)XPVF 11m³/min, 125VN(S)XPVF 20m³/min, 140VN(S)XPVF1 22m³/min, 140VN(S)XTVF 11m³/min

SPECIFICATIONS

The values are for simultaneous Multi operation.

Set model name				Micro Inverter					
				FDEN100VNPVF	FDEN125VNPVF	FDEN140VNPVF1	FDEN140VNTVF	FDEN100VSPVF	FDEN125VSPVF
				Twin			Triple	Twin	
Indoor unit				FDEN50VF	FDEN60VF	FDEN71VF1	FDEN50VF	FDEN50VF	FDEN60VF
Outdoor unit				FDC100VN	FDC125VN	FDC140VN	FDC140VN	FDC100VS	FDC125VS
Power source				1 Phase 220-240V 50Hz, 1 Phase 220V 60Hz				3 Phase 380-415V 50Hz, 3 Phase 380V 60Hz	
Nominal cooling capacity (Min~Max)			kW	10.0 (4.0 ~ 11.2)	12.5 (5.0 ~ 14.0)	14.0 (5.0 ~ 14.5)	14.0 (5.0 ~ 14.5)	10.0 (4.0 ~ 11.2)	12.5 (5.0 ~ 14.0)
Nominal heating capacity (Min~Max)			kW	11.2 (4.0 ~ 12.5)	14.0 (4.0 ~ 16.0)	16.0 (4.0 ~ 16.5)	16.0 (4.0 ~ 16.5)	11.2 (4.0 ~ 12.5)	14.0 (4.0 ~ 16.0)
Power consumption		Cooling/Heating	kW	3.12 / 3.49	4.23 / 3.83	4.87 / 4.59	4.88 / 4.58	3.12 / 3.49	4.23 / 3.83
EER/COP		Cooling/Heating		3.21 / 3.21	2.96 / 3.66	2.87 / 3.49	2.87 / 3.49	3.21 / 3.21	2.96 / 3.66
Inrush current		220/230/240 V	A	5	5	5	5	5	5
Max. running current				24	24	24	24	15	15
Sound power level*1	Indoor*2	Cooling/Heating	dB(A)	60 / 60	60 / 60	62 / 62	60 / 60	60 / 60	60 / 60
	Outdoor	Cooling/Heating		70 / 70	72 / 72	73 / 73	73 / 73	70 / 70	72 / 72
Sound pressure level*1 ※	Indoor*2	Cooling (Hi/Me/Lo)		39 / 38 / 37	41 / 39 / 38	41 / 39 / 38	39 / 38 / 37	39 / 38 / 37	41 / 39 / 38
		Heating (Hi/Me/Lo)		39 / 38 / 37	41 / 39 / 38	41 / 39 / 38	39 / 38 / 37	39 / 38 / 37	41 / 39 / 38
	Outdoor	Cooling/Heating		49 / 49	50 / 51	51 / 51	51 / 51	49 / 49	50 / 51
Air flow ※	Indoor*2	Cooling (Hi/Me/Lo)	m^3/min	10 / 9 / 7	16 / 14 / 12	16 / 14 / 12	10 / 9 / 7	10 / 9 / 7	16 / 14 / 12
		Heating (Hi/Me/Lo)		10 / 9 / 7	16 / 14 / 12	16 / 14 / 12	10 / 9 / 7	10 / 9 / 7	16 / 14 / 12
	Outdoor	Cooling/Heating		75 / 73	75 / 73	75 / 73	75 / 73	75 / 73	75 / 73
Exterior dimensions	Indoor	HeightxWidthxDepth	mm	210 x 1,070 x 690	210 x 1,320 x 690		210 x 1,070 x 690		210 x 1,320 x 690
	Outdoor			845 x 970 x 370					
Net weight	Indoor		kg	28	37		28		37
	Outdoor			81				83	
Ref.piping size	Liquid/Gas		ømm	9.52(3/8") / 15.88(5/8")					
Refrigerant line (one way) length			m	Max. 50					
Vertical height differences	Outdoor is higher/lower		m	Max.30 / Max.15					
Outdoor operating temperature range		Cooling	°C	-15~43*3					
		Heating		-20~20					
Air filter, Q'ty				Pocket plastic net x 2(Washable)					
Remote control (option)				wired:RC-EX1A, RC-E5, RCH-E3 wireless:RCN-E1R					

※ Powerful-Hi can be selected. Sound level: 100VN(S)PVF 46dB, 125VN(S)PVF 48dB, 140VNPVF1 50dB, 140VNTVF 46dB
Air flow: 100VN(S)PVF 11m^3/min, 125VN(S)PVF 20m^3/min, 140VNPVF1 20m^3/min, 140VNTVF 11m^3/min

SPECIFICATIONS

The values are for simultaneous Multi operation.

Set model name				Micro Inverter						
				FDEN140VSPVF1	FDEN200VSPVF1	FDEN250VSPVF	FDEN140VSTVF	FDEN200VSTVF1	FDEN200VSDVF	FDEN250VSDVF
				Twin			Triple		Double Twin	
Indoor unit				FDEN71VF1	FDEN100VF1	FDEN125VF	FDEN50VF	FDEN71VF1	FDEN50VF	FDEN60VF
Outdoor unit				FDC140VS	FDC200VS	FDC250VS	FDC140VS	FDC200VS	FDC200VS	FDC250VS
Power source				3 Phase 380-415V 50Hz, 3 Phase 380V 60Hz						
Nominal cooling capacity (Min~Max)			kW	14.0 (5.0 ~ 14.5)	20.0 (7.0 ~ 22.4)	25.0 (10.0 ~ 28.0)	14.0 (5.0 ~ 14.5)	20.0 (7.0 ~ 22.4)	20.0 (7.0 ~ 22.4)	25.0 (10.0 ~ 28.0)
Nominal heating capacity (Min~Max)			kW	16.0 (4.0 ~ 16.5)	22.4 (7.6 ~ 25.0)	28.0 (9.5 ~ 31.5)	16.0 (4.0 ~ 16.5)	22.4 (7.6 ~ 25.0)	22.4 (7.6 ~ 25.0)	28.0 (9.5 ~ 31.5)
Power consumption		Cooling/Heating	kW	4.87 / 4.59	6.47 / 5.97	9.01 / 8.05	4.88 / 4.58	6.40 / 5.90	7.43 / 7.26	9.50 / 8.69
EER/COP		Cooling/Heating		2.87 / 3.49	3.09 / 3.75	2.77 / 3.48	2.87 / 3.49	3.13 / 3.80	2.69 / 3.09	2.63 / 3.22
Inrush current		220/230/240 V	A	5	5	5	5	5	5	5
Max. running current				15	19	22	15	19	19	22
Sound power level*1	Indoor*2	Cooling/Heating	dB(A)	62 / 62	64 / 64	67 / 67	60 / 60	62 / 62	60 / 60	60 / 60
	Outdoor	Cooling/Heating		73 / 73	74 / 74	74 / 74	73 / 73	74 / 74	74 / 74	74 / 74
Sound pressure level*1 ※	Indoor*2	Cooling (Hi/Me/Lo)		41 / 39 / 38	44 / 41 / 39	46 / 44 / 43	39 / 38 / 37	41 / 39 / 38	39 / 38 / 37	41 / 39 / 38
		Heating (Hi/Me/Lo)		41 / 39 / 38	44 / 41 / 39	46 / 44 / 43	39 / 38 / 37	41 / 39 / 38	39 / 38 / 37	41 / 39 / 38
	Outdoor	Cooling/Heating		51 / 51	57 / 57	57 / 58	51 / 51	57 / 57	57 / 57	57 / 58
Air flow ※	Indoor*2	Cooling (Hi/Me/Lo)	m^3/min	16 / 14 / 12	26 / 23 / 21	29 / 26 / 23	10 / 9 / 7	16 / 14 / 12	10 / 9 / 7	16 / 14 / 12
		Heating (Hi/Me/Lo)		16 / 14 / 12	26 / 23 / 21	29 / 26 / 23	10 / 9 / 7	16 / 14 / 12	10 / 9 / 7	16 / 14 / 12
	Outdoor	Cooling/Heating		75 / 73	150 / 145	150 / 145	75 / 73	150 / 145	150 / 145	150 / 145
Exterior dimensions	Indoor	HeightxWidthxDepth	mm	210 x 1,320 x 690	250 x 1,620 x 690		210 x 1,070 x 690	210 x 1,320 x 690	210 x 1,070 x 690	210 x 1,320 x 690
	Outdoor			845 x 970 x 370	1,300 x 970 x 370	1,505 x 970 x 370	845 x 970 x 370	1,300 x 970 x 370		1,505 x 970 x 370
Net weight	Indoor		kg	37	49		28	37	28	37
	Outdoor			83	122	140	83	122		140
Ref.piping size	Liquid/Gas		ømm	9.52(3/8") / 15.88(5/8")	9.52(3/8") / 22.22(7/8")	12.7(1/2") / 22.22(7/8")	9.52(3/8") / 15.88(5/8")	9.52(3/8") / 22.22(7/8")		12.7(1/2") / 22.22(7/8")
Refrigerant line (one way) length			m	Max.50	Max.70		Max.50	Max.70		
Vertical height differences	Outdoor is higher/lower		m	Max.30 / Max.15						
Outdoor operating temperature range		Cooling	°C	-15~43*3						
		Heating		-20~20	-15~20		-20~20	-15~20		
Air filter, Q'ty				Pocket plastic net x 2(Washable)						
Remote control (option)				wired:RC-EX1A, RC-E5, RCH-E3 wireless:RCN-E1R						

The data are measured under the following conditions(ISO-T1).
Cooling:Indoor temp. of 27˚CDB, 19˚CWB, and outdoor temp. of 35˚CDB. Heating:Indoor temp. of 20˚CDB, and outdoor temp. of 7˚CDB, 6˚CWB.
*1 : Indicates the value in an anechoic chamber. During operation these values are somewhat higher due to ambient conditions.
*2 : The values are for one indoor unit operation.
*3 : If a cooling operation is conducted when the outdoor air temperature is –5˚C or lower, the outdoor unit should be installed at a place where it is not influenced by natural wind. If wind blows, the low pressure will drop and compressor frequency will increase, this will cause the capacity to drop and may cause the unit to break down.

※ Powerful-Hi can be selected. Sound level: 140VSPVF1 50dB, 200VSPVF1 46dB, 250VSPVF 50dB, 140VSTVF 46dB, 200VSTVF1 50dB, 200VSDVF 46dB, 250VSDVF 48dB
Air flow: 140VSPVF1 20m^3/min, 200VSPVF1 28m^3/min, 250VSPVF 32m^3/min, 140VSTVF 11m^3/min, 200VSTVF1 20m^3/min, 200VSDVF 11m^3/min, 250VSDVF 20m^3/min

WALL MOUNTED

SRK

Only used with outdoor units of TWIN, TRIPLE, MULTI System.

R410A

SRK 50/60

Wired remote control (Option)

RC-EX1A

RC-E5

RCH-E3

Point 1 Jet Air Scroll

We used the same aerodynamic analysis technology as used in developing jet engines.

CFD (computational fluid dynamics), used in blade shape design of jet engines, has been applied to the design of air channels in air conditioners to develop the ideal air channel system (air circulation). The airflow of the jets created in this system enable a large volume of air to be blown with minimum power consumption, yet the air flow is uniform, quiet and reaches points a long distance from the blower.

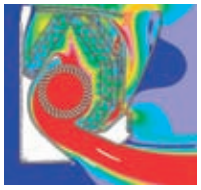

Fast ← → Slow

Colors in the figure show the air speed.

Max four indoor units are connectable.

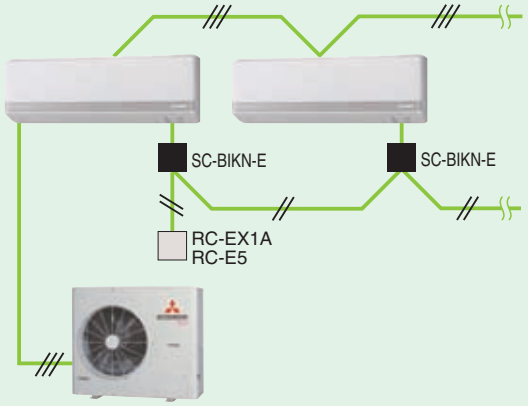

Point 2 Long Reach Air Flow

Powerful airflow is realized by Jet technology.
Good for large living rooms and shops.
Increase your comfort.

SRK50/60ZMX
(in cooling operation)

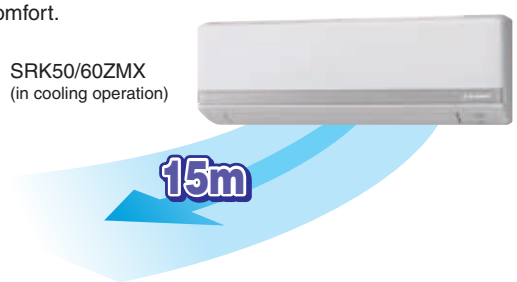

Dimensions (Unit:mm)

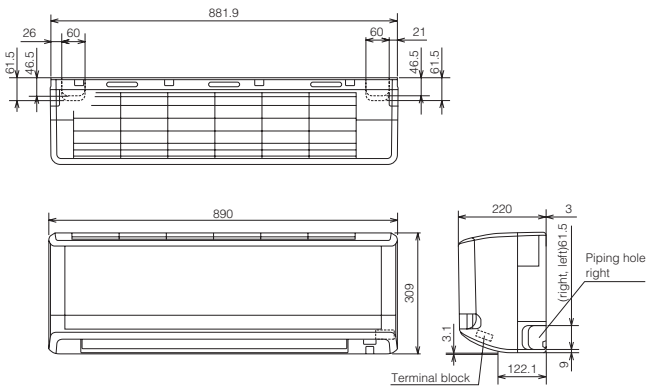

SPECIFICATIONS

The values are for simultaneous Multi operation.

Set model name				Hyper Inverter					
				SRK100VNXPZMX	SRK125VNXPZMX	SRK140VNXTZMX	SRK100VSXPZMX	SRK125VSXPZMX	SRK140VSXTZMX
				Twin		Triple	Twin		Triple
Indoor unit				SRK50ZMX-S	SRK60ZMX-S	SRK50ZMX-S	SRK50ZMX-S	SRK60ZMX-S	SRK50ZMX-S
Outdoor unit				FDC100VNX	FDC125VNX	FDC140VNX	FDC100VSX	FDC125VSX	FDC140VSX
Power source				1 Phase 220-240V 50Hz, 1 Phase 220V 60Hz			3 Phase 380-415V 50Hz, 3 Phase 380V 60Hz		
Nominal cooling capacity (Min~Max)			kW	10.0 (4.0 ~ 11.2)	12.5 (5.0 ~ 14.0)	14.0 (5.0 ~ 16.0)	10.0 (4.0 ~ 11.2)	12.5 (5.0 ~ 14.0)	14.0 (5.0 ~ 16.0)
Nominal heating capacity (Min~Max)			kW	11.2 (4.0 ~ 12.5)	14.0 (4.0 ~ 17.0)	16.0 (4.0 ~ 18.0)	11.2 (4.0 ~ 16.0)	14.0 (4.0 ~ 18.0)	16.0 (4.0 ~ 20.0)
Power consumption		Cooling/Heating	kW	2.66 / 2.60	3.60 / 3.48	3.98 / 3.68	2.66 / 2.60	3.60 / 3.48	3.98 / 3.68
EER/COP		Cooling/Heating		3.76 / 4.31	3.47 / 4.02	3.52 / 4.35	3.76 / 4.31	3.47 / 4.02	3.52 / 4.35
Inrush current		220/230/240 V	A	5	5	5	5	5	5
Max. running current				24	26	26	15	15	15
Sound power level*1	Indoor*2	Cooling/Heating	dB(A)	60 / 64	64 / 64	60 / 64	60 / 64	64 / 64	60 / 64
	Outdoor	Cooling/Heating		70 / 70	70 / 70	72 / 72	70 / 70	70 / 70	72 / 72
Sound pressure level*1 ※	Indoor*2	Cooling (Hi/Me/Lo/Ulo)		47 / 40 / 27 / 25	51 / 41 / 29 / 25	47 / 40 / 27 / 25	47 / 40 / 27 / 25	51 / 41 / 29 / 25	47 / 40 / 27 / 25
		Heating (Hi/Me/Lo/Ulo)		48 / 40 / 33 / 26	48 / 41 / 34 / 27	48 / 40 / 33 / 26	48 / 40 / 33 / 26	48 / 41 / 34 / 27	48 / 40 / 33 / 26
	Outdoor	Cooling/Heating		48 / 50	48 / 50	49 / 52	48 / 50	48 / 50	49 / 52
Air flow ※	Indoor*2	Cooling (Hi/Me/Lo/Ulo)	m^3/min	13.5 / 11 / 8 / 7	14.5 / 12.5 / 8.5 / 7	13.5 / 11 / 8 / 7	13.5 / 11 / 8 / 7	14.5 / 12.5 / 8.5 / 7	13.5 / 11 / 8 / 7
		Heating (Hi/Me/Lo/Ulo)		17 / 14.5 / 10.5 / 8	17.5 / 15 / 11 / 8.5	17 / 14.5 / 10.5 / 8	17 / 14.5 / 10.5 / 8	17.5 / 15 / 11 / 8.5	17 / 14.5 / 10.5 / 8
	Outdoor	Cooling/Heating		100 / 100	100 / 100	100 / 100	100 / 100	100 / 100	100 / 100
Exterior dimensions	Indoor	HeightxWidthxDepth	mm	309 x 890 x 220					
	Outdoor			1,300 x 970 x 370					
Net weight	Indoor		kg	15					
	Outdoor			105					
Ref.piping size	Liquid/Gas		ømm	9.52(3/8") / 15.88(5/8")					
Refrigerant line (one way) length			m	Max.100					
Vertical height differences		Outdoor is higher/lower	m	Max.30 / Max.15					
Outdoor operating temperature range		Cooling	°C	-15~43*3					
		Heating		-20~20					
Air filter, Q'ty				Polypropylene net x 2(washable)					
Remote control (option)				wired:RC-EX1A, RC-E5, RCH-E3 & Interface kit:SC-BIKN-E					

SPECIFICATIONS

The values are for simultaneous Multi operation.

Set model name				Micro Inverter					
				SRK100VNPZMX	SRK125VNPZMX	SRK140VNTZMX	SRK100VSPZMX	SRK125VSPZMX	SRK140VSXTZMX
				Twin		Triple	Twin		Triple
Indoor unit				SRK50ZMX-S	SRK60ZMX-S	SRK50ZMX-S	SRK50ZMX-S	SRK60ZMX-S	SRK50ZMX-S
Outdoor unit				FDC100VN	FDC125VN	FDC140VN	FDC100VS	FDC125VS	FDC140VS
Power source				1 Phase 220-240V 50Hz, 1 Phase 220V 60Hz			3 Phase 380-415V 50Hz, 3 Phase 380V 60Hz		
Nominal cooling capacity (Min~Max)			kW	10.0 (4.0 ~ 11.2)	12.5 (5.0 ~ 14.0)	14.0 (5.0 ~ 14.5)	10.0 (4.0 ~ 11.2)	12.5 (5.0 ~ 14.0)	14.0 (5.0 ~ 14.5)
Nominal heating capacity (Min~Max)			kW	11.2 (4.0 ~ 12.5)	14.0 (4.0 ~ 16.0)	16.0 (4.0 ~ 16.5)	11.2 (4.0 ~ 12.5)	14.0 (4.0 ~ 16.0)	16.0 (4.0 ~ 16.5)
Power consumption		Cooling/Heating	kW	2.72 / 2.86	4.25 / 4.29	4.53 / 4.05	2.72 / 2.86	4.25 / 4.29	4.53 / 4.05
EER/COP		Cooling/Heating		3.68 / 3.92	2.94 / 3.26	3.09 / 3.95	3.68 / 3.92	2.94 / 3.26	3.09 / 3.95
Inrush current		220/230/240 V	A	5	5	5	5	5	5
Max. running current				24	24	24	15	15	15
Sound power level*1	Indoor*2	Cooling/Heating	dB(A)	60 / 64	64 / 64	60 / 64	60 / 64	64 / 64	60 / 64
	Outdoor	Cooling/Heating		70 / 70	72 / 72	73 / 73	70 / 70	72 / 72	73 / 73
Sound pressure level*1 ※	Indoor*2	Cooling (Hi/Me/Lo/Ulo)		47 / 40 / 27 / 25	51 / 41 / 29 / 25	47 / 40 / 27 / 25	47 / 40 / 27 / 25	51 / 41 / 29 / 25	47 / 40 / 27 / 25
		Heating (Hi/Me/Lo/Ulo)		48 / 40 / 33 / 26	48 / 41 / 34 / 27	48 / 40 / 33 / 26	48 / 40 / 33 / 26	48 / 41 / 34 / 27	48 / 40 / 33 / 26
	Outdoor	Cooling/Heating		49 / 49	50 / 51	51 / 51	49 / 49	50 / 51	51 / 51
Air flow ※	Indoor*2	Cooling (Hi/Me/Lo/Ulo)	m^3/min	13.5 / 11 / 8 / 7	14.5 / 12.5 / 8.5 / 7	13.5 / 11 / 8 / 7	13.5 / 11 / 8 / 7	14.5 / 12.5 / 8.5 / 7	13.5 / 11 / 8 / 7
		Heating (Hi/Me/Lo/Ulo)		17 / 14.5 / 10.5 / 8	17.5 / 15 / 11 / 8.5	17 / 14.5 / 10.5 / 8	17 / 14.5 / 10.5 / 8	17.5 / 15 / 11 / 8.5	17 / 14.5 / 10.5 / 8
	Outdoor	Cooling/Heating		75 / 73	75 / 73	75 / 73	75 / 73	75 / 73	75 / 73
Exterior dimensions	Indoor	HeightxWidthxDepth	mm	309 x 890 x 220					
	Outdoor			845 x 970 x 370					
Net weight	Indoor		kg	15					
	Outdoor			81			83		
Ref.piping size	Liquid/Gas		ømm	9.52(3/8") / 15.88(5/8")					
Refrigerant line (one way) length			m	Max. 50					
Vertical height differences		Outdoor is higher/lower	m	Max.30 / Max.15					
Outdoor operating temperature range		Cooling	°C	-15~43*3					
		Heating		-20~20					
Air filter, Q'ty				Polypropylene net x 2(washable)					
Remote control (option)				wired:RC-EX1A, RC-E5, RCH-E3 & Interface kit:SC-BIKN-E					

The data are measured under the following conditions (ISO-T1).
Cooling:Indoor temp. of 27˚CDB, 19˚CWB, and outdoor temp. of 35˚CDB. Heating:Indoor temp. of 20˚CDB, and outdoor temp. of 7˚CDB, 6˚CWB.
*1 : Indicates the value in an anechoic chamber. During operation these values are somewhat higher due to ambient conditions.
*2 : The values are for one indoor unit operation.
*3 : If a cooling operation is conducted when the outdoor air temperature is –5˚C or lower, the outdoor unit should be installed at a place where it is not influenced by natural wind. If wind blows, the low pressure will drop and compressor frequency will increase, this will cause the capacity to drop and may cause the unit to break down.

MULTI [INDOOR UNIT]

FLOOR STANDING

FDF

FDF 71/100/125

Wireless remote control (Option)

RCN-KIT3-E

SPECIFICATIONS

The values are for simultaneous Multi operation.

				Hyper Inverter	
Set model name				FDF140VNXPVD1	FDF140VSXPVD1
				Twin	
Indoor unit				FDF71VD1	FDF71VD1
Outdoor unit				FDC140VNX	FDC140VSX
Power source				1 Phase 220-240V 50Hz, 1 Phase 220V 60Hz	3 Phase380-415V 50Hz, 3 Phase 380V 60Hz
Nominal cooling capacity (Min~Max)			kW	14.0 (5.0 ~ 16.0)	14.0 (5.0 ~ 16.0)
Nominal heating capacity (Min~Max)			kW	16.0 (4.0 ~ 18.0)	16.0 (4.0 ~ 20.0)
Power consumption		Cooling/Heating	kW	4.83 / 4.97	4.83/ 4.97
EER/COP		Cooling/Heating		2.90 / 3.22	2.90 / 3.22
Inrush current		220/230/240 V	A	5	5
Max. running current				26	15
Sound power level*1	Indoor*2	Cooling/Heating	dB(A)	61 / 61	61 / 61
	Outdoor	Cooling/Heating		72 / 72	72 / 72
Sound pressure level*1 ※	Indoor*2	Cooling (Hi/Me/Lo)		39 / 35 / 33	39 / 35 / 33
		Heating (Hi/Me/Lo)		39 / 35 / 33	39 / 35 / 33
	Outdoor	Cooling/Heating		49 / 52	49 / 52
Air flow ※	Indoor*2	Cooling (Hi/Me/Lo)	m^3/min	16 / 14 / 12	16 / 14 / 12
		Heating (Hi/Me/Lo)		16 / 14 / 12	16 / 14 / 12
	Outdoor	Cooling/Heating		100 / 100	100 / 100
Exterior dimensions	Indoor	HeightxWidthxDepth	mm	1,850 x 600 x 320	
	Outdoor			1,300 x 970 x 370	
Net weight	Indoor		kg	49	
	Outdoor			105	
Ref.piping size	Liquid/Gas		ømm	9.52(3/8") / 15.88(5/8")	
Refrigerant line (one way) length			m	Max.100	
Vertical height differences	Outdoor is higher/lower		m	Max.30 / Max.15	
Outdoor operating temperature range	Cooling		℃	-15~43*3	
	Heating			-20~20	
Air filter, Q'ty				Plastic net x 1(washable)	
Remote control				wired:RC-E5 (installed) wireless:RCN-KIT3-E (option)	

SPECIFICATIONS

The values are for simultaneous Multi operation.

				Micro Inverter			
Set model name				FDF140VNPVD1	FDF140VSPVD1	FDF200VSPVD1	FDF250VSPVD
				Twin			
Indoor unit				FDF71VD1	FDF71VD1	FDF100VD1	FDF125VD
Outdoor unit				FDC140VN	FDC140VS	FDC200VS	FDC250VS
Power source				1 Phase 220-240V 50Hz, 1 Phase 220V 60Hz	3 Phase 380-415V 50Hz, 3 Phase 380V 60Hz		
Nominal cooling capacity (Min~Max)			kW	14.0 (5.0 ~ 14.5)	14.0 (5.0 ~ 14.5)	20.0 (7.0 ~ 22.4)	25.0 (10.0 ~ 28.0)
Nominal heating capacity (Min~Max)			kW	16.0 (4.0 ~ 16.5)	16.0 (4.0 ~ 16.5)	22.4 (7.6 ~ 25.0)	28.0 (9.5 ~ 31.5)
Power consumption		Cooling/Heating	kW	5.16 / 5.01	5.16 / 5.01	6.50 / 6.42	8.95 / 9.17
EER/COP		Cooling/Heating		2.71 / 3.19	2.71 / 3.19	3.08 / 3.49	2.79 / 3.05
Inrush current		220/230/240 V	A	5	5	5	5
Max. running current				24	15	19	22
Sound power level*1	Indoor*2	Cooling/Heating	dB(A)	61 / 61	61 / 61	65 / 65	73 / 73
	Outdoor	Cooling/Heating		73 / 73	73 / 73	74 / 74	74 / 74
Sound pressure level*1 ※	Indoor*2	Cooling (Hi/Me/Lo)		39 / 35 / 33	39 / 35 / 33	50 / 48 / 44	50 / 48 / 44
		Heating (Hi/Me/Lo)		39 / 35 / 33	39 / 35 / 33	50 / 48 / 44	50 / 48 / 44
	Outdoor	Cooling/Heating		51 / 51	51 / 51	57 / 57	57 / 58
Air flow ※	Indoor*2	Cooling (Hi/Me/Lo)	m^3/min	16 / 14 / 12	16 / 14 / 12	26 / 23 / 19	26 / 23 / 19
		Heating (Hi/Me/Lo)		16 / 14 / 12	16 / 14 / 12	26 / 23 / 19	26 / 23 / 19
	Outdoor	Cooling/Heating		75 / 73	75 / 73	150 / 145	150 / 145
Exterior dimensions	Indoor	HeightxWidthxDepth	mm	1,850 x 600 x 320			
	Outdoor			845 x 970 x 370		1,300 x 970 x 370	1,505 x 970 x 370
Net weight	Indoor		kg	49		52	
	Outdoor			81	83	122	140
Ref.piping size	Liquid/Gas		ømm	9.52(3/8") / 15.88(5/8")		9.52(3/8") / 22.22(7/8")	12.7(1/2") / 22.22(7/8")
Refrigerant line (one way) length			m	Max.50		Max.70	
Vertical height differences	Outdoor is higher/lower		m	Max.30 / Max.15			
Outdoor operating temperature range	Cooling		℃	-15~43*3			
	Heating			-20~20		-15~20	
Air filter, Q'ty				Plastic net x 1(washable)			
Remote control				wired:RC-E5 (installed) wireless:RCN-KIT3-E (option)			

The data are measured under the following conditions(ISO-T1).
Cooling:Indoor temp. of 27˚CDB, 19˚CWB, and outdoor temp. of 35˚CDB. Heating:Indoor temp. of 20˚CDB, and outdoor temp. of 7˚CDB, 6˚CWB.

*1 : Indicates the value in an anechoic chamber. During operation these values are somewhat higher due to ambient conditions.

*2 : The values are for one indoor unit operation.

*3 : If a cooling operation is conducted when the outdoor air temperature is –5˚C or lower, the outdoor unit should be installed at a place where it is not influenced by natural wind. If wind blows, the low pressure will drop and compressor frequency will increase, this will cause the capacity to drop and may cause the unit to break down.

※ Powerful-Hi can be selected. Sound level:140VN(S)XPVD1 42dB, 140VN(S)PVD1 42dB, 200VSPVD1/250VSPVD 54dB
Air flow: 140VN(S)XPVD1 18m^3/min, 140VN(S)PVD1 18m^3/min, 200VSPVD1/250VSPVD 29m^3/min

Consideration on the Environment

All models employ R410A, with RoHS* directive

Several radical design changes and engineering developments have brought about a vast improvement in energy efficiency and environmental protection.

ENERGY LABEL

SEER and SCOP is defined in European regulations listed below.

No.626/2011 of 4 May 2011: energy labeling of air-conditioners (below cooling capacity 12kW).
No.206/2012 of 6 March 2012: requirement for air-conditioners and comfort fans.

Seasonal efficiency is the new way of rating the true efficiency of heating and cooling products over an entire year.

Set by the EU's new regulation implementing Eco-Design Directive for Energy Related Product (ErP) which specifies the minimum efficiency of air-conditioners manufacturers must integrate into their products.

The new Seasonal Efficiency rating system that must be used for heating and cooling by all manufacturers are;

SEER - Seasonal Efficiency Ratio (value in cooling)
SCOP - Seasonal Coefficient of Performance (value in heating)

The new rating system will indicate the true efficiency of the energy using product at specified condition.

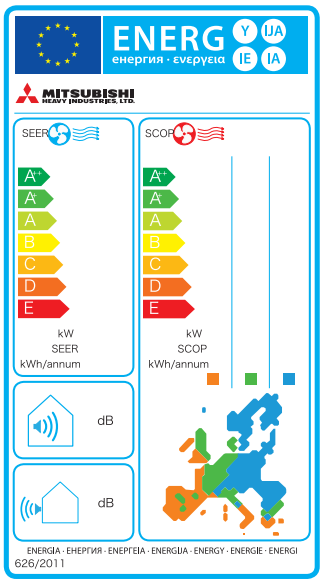

Employment of lead-free solder

Adapted to RoHS directive

RoHS:Restriction of Hazardous substances

In order to avoid the release of hazardous substances into the environments, all models have utilized lead-free solder application. It has been considered to be difficult to use lead-free solder for practical applications because it requires higher solder temperatures at assembly, which can jeopardize reliability. However our PbF soldering method can produce a higher quality lead-free printed circuit board.

Employment of R410A

All models use refrigerant R410A characterized by the ozone depletion coefficient being 0.

Excellent Energy Saving

High performance and excellent energy savings are achieved at the same time by heat exchanger's increased capacity and employment of high efficiency DC motor.

Convenience

External switch connection CnT

All indoor units are equipped with an additional connection point-CnT-to connect indoor units to an external ON/OFF switch; e.g. time clock, fire alarm, etc.

Remote surveillance system

Card key on-off

Monitoring Function

Equipped with RS232C for connection directly to your PC monitoring and service tasks made simple with our service software (“Mente PC”).

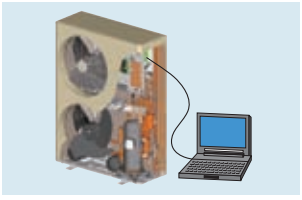

Control System SUPERLINK-II

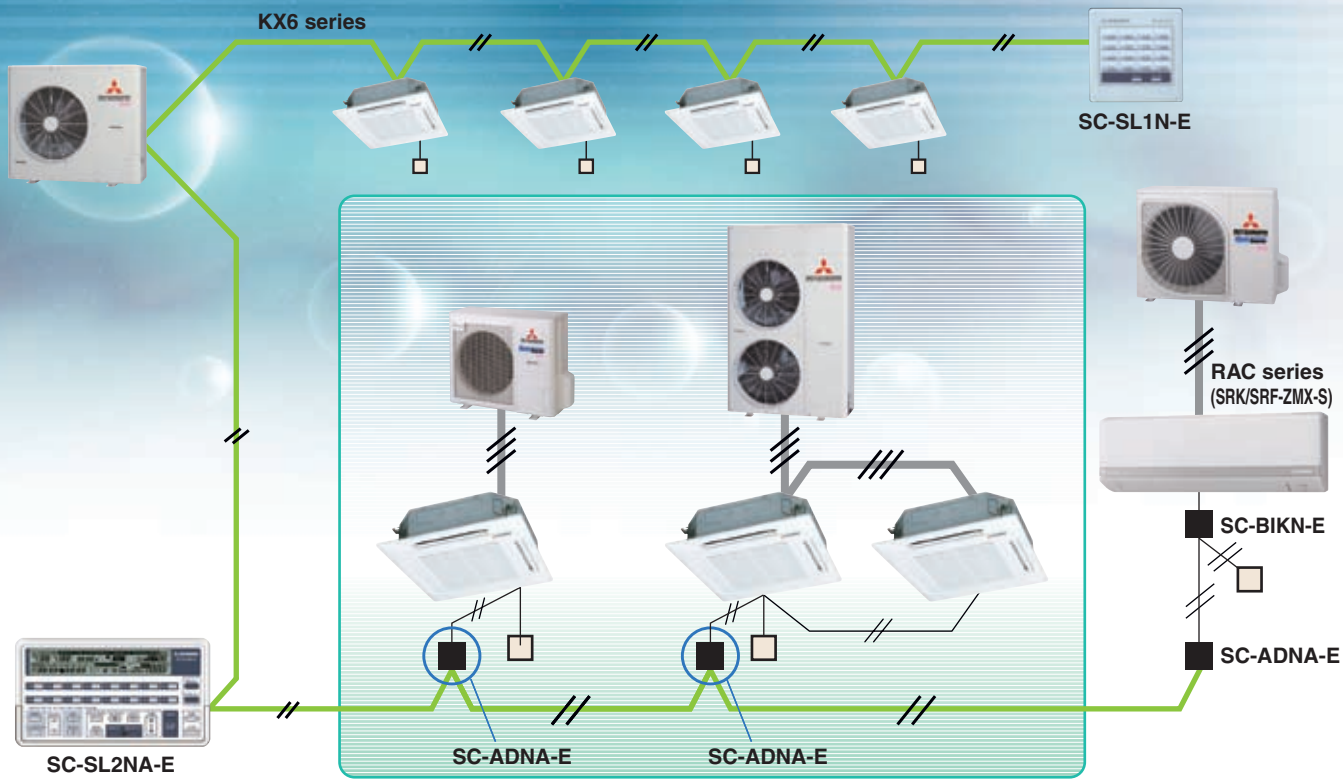

Central Control

SC-SL1N-E

Start/stop control of up to 16 indoor units is possible either individually or collectively. With simple operations, you can effect centralized control.

SC-SL2NA-E

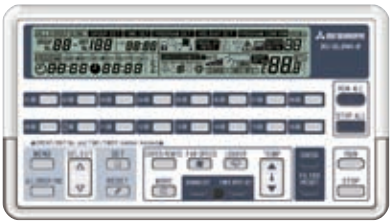

Centralized control of up to 64 indoor units. It can allow connection with a weekly timer without using any interface.

SC-SL4-AE/BE

Easy operation realized with a large color LCD and touch panel. Up to 128 indoor units can be controlled, when SUPERLINK-Ⅱ systems are connected.

PC windows central control

SC-WGWNB-A/B*

(SC-WGWNB-B is with electric power calculation function)

Production by order

Up to 96 cells (some cells can have two or more indoor units and total number of indoor units can be up to 128 units) are controlled from the Internet Explorer.

BMS interface unit

SC-BGWNA-A/B
SC-BGWNA256-A/B*
(BACnet gateway)

(SC-BGWNA-B/BGWNA256-B are with electric power calculation function)

Production by order

In case of SC-BGWNA256-A/B, up to 256 cells (some cells can have two or more indoor units and total number of indoor units can be up to 256 units) are controlled centrally from a BMS.

In case of SC-BGWNA-B/BGWNA256-B, communication test by qualified person regarding electric cost calculation function is required before commissioning.

SC-LGWNA-A*
(LonWorks gateway)

Production by order

Up to 96 indoor units (48 indoor unit x 2) are linked as an open network. Centrally controlled through LonWorks.

*Additional engineering service cost etc. is required. Please consult your dealer when using these system.

SUPERLINK E BOARD (SC-ADNA-E)

This board is used when conducting control of the single package (wired remote control unit) 1-type series using a network option (SC-SL1N-E, SC-SL2NA-E, etc).

(1) Functions

(a) Transmits the settings from the network option to the indoor units.
(b) Returns the priority indoor unit data in response to a data request from the network option.
(c) Inspects the error status of connected indoor units and transmits the inspection codes to the network option.
(d) A maximum of 16 units can be controlled (if in the same operation mode).

(2) Wiring connection diagram

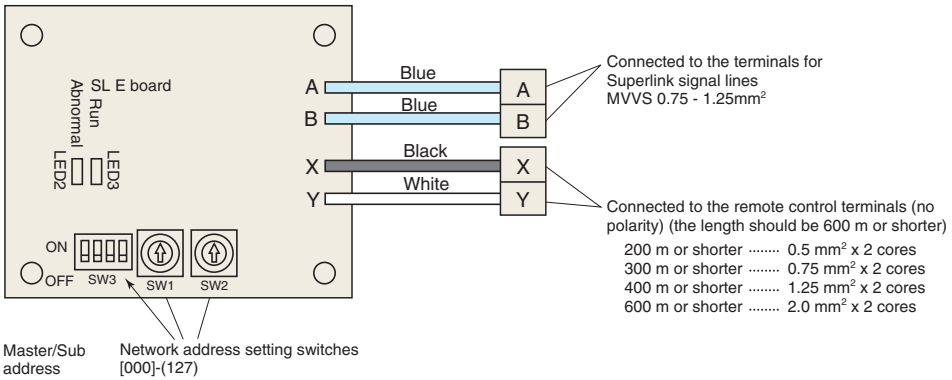

Basic Connections

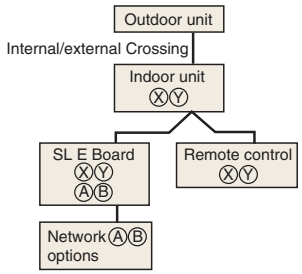

Plural Controls by Multiple Remote Controls. Mixture of Multiple Units

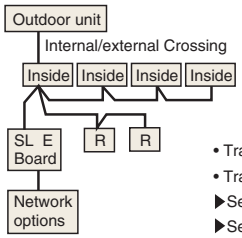

- Transmit the information of plural "Master" units to the network.
- Transmit the abnormalities of the "Slave" units to the network.
- ▶Setting the plural "Master/Slave" units with the dip SW of the printed circuit board.
- ▶Setting the "Master/Slave" remote controls with the dip SW of the remote control board.

Plural Controls by Multiple Remote Controls. Mixture of Multiple Units

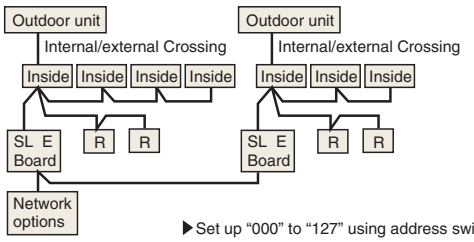

▶Set up "000" to "127" using address switch on the SL E board.

Without Remote Control

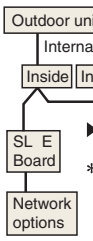

▶Set the SL E board dip SW to "Master" SW3-1 ON.
∗The network option SLA-1-E, SL1N-E is not allowed (This will disturb switching of the operation mode)

Wireless Kit

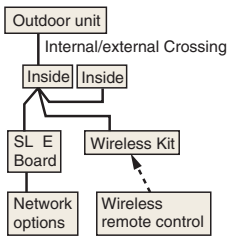

(3) Metal box dimension (unit:mm)

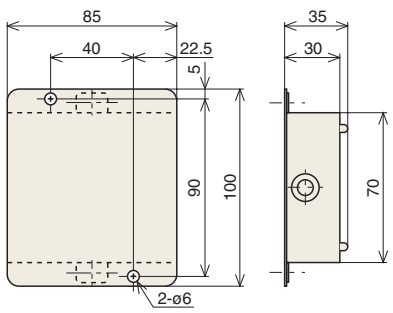

Simple setting REMOTE CONTROL

Advanced touch screen panel with full dot Liquid Crystal display

User friendly

- LCD panel with light tap operation introduced as the industry's first
- Simple interface with only three buttons

High level of visibility

- Big LCD with 3.8 inch full dot display
- Back light function
- Multi language display (9 languages)

RC-EX1A

Run / Stop

High power operation

The highest capacity operation (Max 15 minutes)

- Increasing compressor speed
- Increasing air flow volume

Energy-saving operation

- Changes set temperature. At 28°C in cooling mode and 22°C in heating mode, 25°C in auto mode.
- Operation correction by outdoor temperature

Simple setting by tapping button only

(Option)

Basic operation

All settings done by tapping touch screen panel

Operation mode setting screen

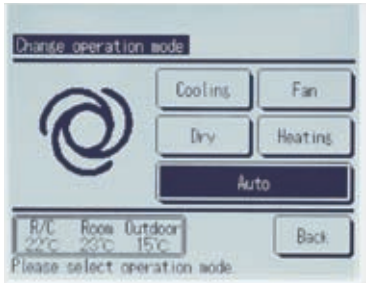

The desired operation mode can be selected by simply tapping this button.

Setting temperature screen

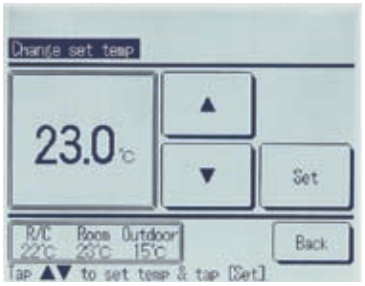

You can select the temperature as desired by tapping ▲▼ button.

Operation mode

- Cooling
- Fan
- Dry
- Heating
- Auto

Main functions

Saving energy

Sleep timer
Peak cut timer
Automatic temperature set back
Weekly timer
Set ON/OFF timer by hour
Set ON/OFF timer by clock

Comfort

Individual flap control
High power operation
External ventilation ON/OFF
Warming up operation
Automatic fan speed
Temperature increment setting by 0.5°C

Convenience

LCD contrast setting
Back light setting
Filter sign
Control sound
Outdoor silent mode
Summer time setting
Home leave mode
Indoor & outdoor temperature display
Heating standby display
Defrosting operation display
Auto cooling/heating display
°C/°F display
Administrator settings
Room name setting

Service

Error code display
Operation data display
Next service date display
Contact company display
USB connection (mini-B)

Control Systems [Individual control]

Remote Control line up

	indoor unit	remote control
wired	all models	RC-EX1A
		RC-E5
		RCH-E3

	indoor unit	remote control
wireless	FDT	RCN-T-36W-E
	FDTC	RCN-TC-24W-ER
	FDUM, FDU, FDF	RCN-KIT3-E
	FDEN	RCN-E1R

Wired remote control with weekly timer (option)

RC-E5

The RC-E5 control enables extensive access to service and maintenance technical data combined with easy to use functions and a clear LCD display.

Weekly timer function as standard

RC-E5 provides (as a standard feature) a weekly timer, which allows one-week operation schedules to be registered. A user can specify up to four times a day to start/stop the air conditioner. (Temperature setting is also possible with the timer).

Timer operation

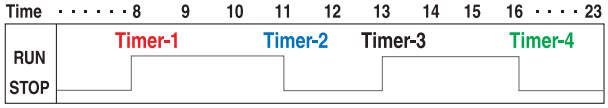

Run hour meters to facilitate maintenance checking

RC-E5 stores operation data when an anomaly occurs and indicates the error on the LCD. It also displays cumulative operation hours of the air conditioner and compressor since commissioning.

Room temperature controlled by the remote control sensor

The temperature sensor is housed in the top section of the remote control unit. This arrangement has improved the sensitivity of the remote control unit's sensor, which permits more finely controlled air conditioning.

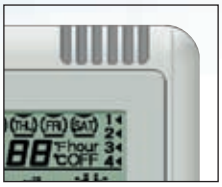

Changeable set temperature ranges

RC-E5 allows the upper and lower limits of a set temperature range to be specified separately.
By adjusting a set temperature range, you can ensure energy saving air conditioning by avoiding excessive cooling or heating.

	Changeable range
Upper limit	20~30˚C(effective for heating operation)
Lower limit	18~26˚C(effective for non-heating operation)

Simple remote control (option)

RCH-E3 (wired)

Considering specialized usage in hotel rooms, control buttons are limited only to minimum required functions such as ON/OFF, mode, temperature setting and fan speed. It is really simple and easy to use.

RCH-E3 is not applicable to the Individual flap control system and the Flap control system.
When RCH-E3 is used, the fan has 3 speed settings (Hi-Me-Lo) only.

Up to 16 units

It can control up to 16 units individually, with pressing the AIR CON No. button.

AUTO restart

This function allows starting the air conditioner automatically when power supply is restored after power failure or by turning on the power switch.

Wireless remote control (option)

For wireless control simply insert the infrared receiver kit on a corner of the panel.

RCN-T-36W-E,
RCN-TC-24W-ER

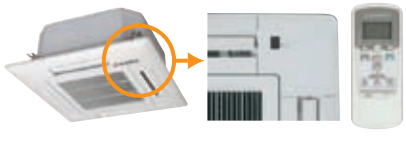

RCN-KIT3-E

RCN-E1R

Wireless remote control is not applicable to the Individual flap control system and the Flap control system.
When wireless remote control and RCH-E3 are used, the fan has 3 speed settings (Hi-Me-Lo) only.

Thermistor (option)

SC-THB-E3

In case sensor in the indoor units or the remote control sensor can not sense the room temperature correctly, or individual remote control in each room is not required but only censor is required (as when center control system is in place), install SC-THB-E3 at proper place in the rooms.

FOR EU/EEA AREA ONLY

Based on European regulations listed below, please refer the following specification table.

No.626/2011 of 4 May 2011: energy labeling of air-conditioners (below cooling capacity 12kW)
No.206/2012 of 6 March 2012: requirement for air-conditioners and comfort fans

Indoor unit		FDT40VF	FDT50VF	FDT60VF	FDT71VF1	FDT100VF1	FDT100VF1	FDT100VF1	FDT100VF1	FDTC40VF	FDTC50VF
Outdoor unit		SRC40ZMX-S	SRC50ZMX-S	SRC60ZMX-S	FDC71VNX	FDC100VNX	FDC100VSX	FDC100VN	FDC100VS	SRC40ZMX-S	SRC50ZMX-S
Energy class (cooling/heating)		A++/A+	A++/A+	A++/A	A+/A+	A+/A	A+/A	A+/A	A/A	A++/A	A+ /A
SEER		7.57	6.91	7.69	5.72	5.84	5.79	5.61	5.57	6.53	6.01
SCOP (Average climate)		4.16	4.09	3.86	4.09	3.96	3.95	3.92	3.91	3.96	3.85
Pdesignc	kW	4.0	5.0	5.6	7.1	10.0	10.0	10.0	10.0	4.0	5.0
Pdesignh (@-10°C)	kW	4.8	5.1	5.9	6.5	13.5	13.5	9.7	9.7	4.0	4.8
Annual electricity consumption (cooling/heating)	kWh/a	185/1617	254/1748	255/2139	435/2226	600/4778	605/4783	625/3466	629/3470	215/1416	291/1745
Refrigerant (GWP)		R410A (1975)									
Designated heating season		Average									

Indoor unit		FDTC60VF	FDU71VF1	FDU100VF1	FDU100VF1	FDU100VF1	FDU100VF1	FDUM40VF	FDUM50VF	FDUM60VF	FDUM71VF1	FDUM100VF1
Outdoor unit		SRC60ZMX-S	FDC71VNX	FDC100VNX	FDC100VSX	FDC100VN	FDC100VS	SRC40ZMX-S	SRC50ZMX-S	SRC60ZMX-S	FDC71VNX	FDC100VNX
Energy class (cooling/heating)		A+/A	A/A	A/A+	A/A+	B/A	B/A	A+/A+	A+/A+	A++/A+	A/A	A/A+
SEER		5.76	5.24	5.22	5.19	5.06	5.03	6.01	5.68	6.42	5.24	5.22
SCOP (Average climate)		3.80	3.90	4.10	4.10	3.94	3.94	4.15	4.36	4.37	3.90	4.10
Pdesignc	kW	5.6	7.1	10.0	10.0	10.0	10.0	4.0	5.0	5.6	7.1	10.0
Pdesignh (@-10°C)	kW	5.9	7.0	13.0	13.0	9.3	9.3	3.5	4.3	5.4	7.0	13.0
Annual electricity consumption (cooling/heating)	kWh/a	341/2172	475/2513	670/4437	675/4441	692/3303	696/3307	233/1182	309/1382	306/1731	475/2513	670/4437
Refrigerant (GWP)		R410A (1975)										
Designated heating season		Average										

Indoor unit		FDUM100VF1	FDUM100VF1	FDUM100VF1	FDEN40VF	FDEN50VF	FDEN60VF	FDEN71VF1	FDEN100VF1	FDEN100VF1	FDEN100VF1
Outdoor unit		FDC100VSX	FDC100VN	FDC100VS	SRC40ZMX-S	SRC50ZMX-S	SRC60ZMX-S	FDC71VNX	FDC100VNX	FDC100VSX	FDC100VN
Energy class (cooling/heating)		A/A+	B/A	B/A	A++/A	A+/A	A+/A	B/A	A/A	A/A	A/A
SEER		5.19	5.06	5.03	6.14	5.83	5.72	4.67	5.15	5.12	5.13
SCOP (Average climate)		4.10	3.94	3.94	3.81	3.81	3.80	3.80	3.80	3.80	3.80
Pdesignc	kW	10.0	10.0	10.0	4.0	5.0	5.6	7.1	10.0	10.0	10.0
Pdesignh (@-10°C)	kW	13.0	9.3	9.3	3.3	4.0	5.0	6.5	13.0	13.0	9.2
Annual electricity consumption (cooling/heating)	kWh/a	675/4441	692/3303	696/3307	228/1214	301/1472	343/1842	532/2394	680/4789	685/4793	683/3387
Refrigerant (GWP)		R410A (1975)									
Designated heating season		Average									

Indoor unit		FDEN100VF1	FDF71VD1	FDF100VD1	FDF100VD1	FDF100VD1	FDF100VD1	FDT40VFx2	FDTC40VFx2	FDUM40VFx2	FDEN40VFx2
Outdoor unit		FDC100VS	FDC71VNX	FDC100VNX	FDC100VSX	FDC100VN	FDC100VS	FDC71VNX			
Energy class (cooling/heating)		A/A	B/A	A/A	A/A	B/A	B/A	A+/A+	A/A	A+/A+	B/A
SEER		5.10	4.80	5.20	5.17	5.02	4.99	5.68	5.31	5.61	4.92
SCOP (Average climate)		3.80	3.81	3.80	3.80	3.80	3.80	4.10	3.88	4.05	3.80
Pdesignc	kW	10.0	7.1	10.0	10.0	10.0	10.0	7.1	7.1	7.1	7.1
Pdesignh (@-10°C)	kW	9.2	6.7	13.0	13.0	9.3	9.3	7.3	6.8	7	6.7
Annual electricity consumption (cooling/heating)	kWh/a	687/3390	518/2464	673/4792	678/4795	697/3423	701/3427	438/2494	468/2455	444/2422	506/2470
Refrigerant (GWP)		R410A (1975)									
Designated heating season		Average									

Indoor unit		FDT50VFx2	FDTC50VFx2	FDUM50VFx2	FDEN50VFx2	SRK50ZMX-Sx2	FDT50VFx2	FDTC50VFx2	FDUM50VFx2	FDEN50VFx2	SRK50ZMX-Sx2
Outdoor unit		FDC100VNX					FDC100VSX				
Energy class (cooling/heating)		A+/A	A/A	A/A	B/A	A/A+	A+/A	A/A	A/A	B/A	A/A+
SEER		5.92	5.23	5.14	5.07	5.51	5.88	5.19	5.11	5.03	5.47
SCOP (Average climate)		3.85	3.87	3.88	3.80	4.00	3.84	3.86	3.87	3.80	4.00
Pdesignc	kW	10.0	10.0	10.0	10.0	10.0	10.0	10.0	10.0	10.0	10.0
Pdesignh (@-10°C)	kW	13.1	10.2	10.0	10.0	11.6	13.1	10.2	10.0	10.0	11.6
Annual electricity consumption (cooling/heating)	kWh/a	592/4768	670/3692	681/3611	691/3684	636/4060	596/4772	674/3695	685/3614	696/3687	640/4063
Refrigerant (GWP)		R410A (1975)									
Designated heating season		Average									

Indoor unit		FDT50VFx2	FDTC50VFx2	FDUM50VFx2	FDEN50VFx2	SRK50ZMX-Sx2	FDT50VFx2	FDTC50VFx2	FDUM50VFx2	FDEN50VFx2	SRK50ZMX-Sx2
Outdoor unit		FDC100VN					FDC100VS				
Energy class (cooling/heating)		A+/A	A/A	B/A	B/A	A/A+	A+/A	A/A	B/A	B/A	A/A+
SEER		5.89	5.17	4.81	4.80	5.46	5.85	5.13	4.78	4.77	5.47
SCOP (Average climate)		3.81	3.84	3.82	3.80	4.00	3.81	3.84	3.81	3.80	4.00
Pdesignc	kW	10.0	10.0	10.0	10.0	10.0	10.0	10.0	10.0	10.0	10.0
Pdesignh (@-10°C)	kW	9.5	9.4	9.3	9.2	8.2	9.5	9.4	9.3	9.2	8.2
Annual electricity consumption (cooling/heating)	kWh/a	595/ 3488	678/3424	728/3413	730/3388	642/2869	599/3492	682/3428	732/3416	734/3392	646/2872
Refrigerant (GWP)		R410A (1975)									
Designated heating season		Average									

Indoor unit		FDT71VF1	FDT100VF1	FDU71VF1	FDU100VF1	FDUM71VF1	FDUM100VF1	FDEN71VF1	FDEN100VF1	SRK71ZM-S	FDF71VD1	FDF100VD1
Outdoor unit		FDC71VNP	FDC90VNP	FDC71VNP	FDC90VNP	FDC71VNP	FDC90VNP	FDC71VNP	FDC90VNP	FDC71VNP	FDC71VNP	FDC90VNP
Energy class (cooling/heating)		A++/A+	A++/A+	A+/A+	A++/A+	A+/A+	A++/A+	A+/A+	A++/A+	A++/A+	A/A	A+/A+
SEER		6.14	6.73	5.71	6.86	5.71	6.86	5.70	6.18	6.60	5.24	5.69
SCOP (Average climate)		4.27	4.11	4.00	4.20	4.00	4.20	4.00	4.10	4.47	3.91	4.01
Pdesignc	kW	7.1	9.0	7.1	9.0	7.1	9.0	7.1	9.0	7.1	7.1	9.0
Pdesignh (@-10°C)	kW	5.7	8.1	5.7	8.1	5.7	8.1	5.7	8.1	5.7	5.5	8.1
Annual electricity consumption (cooling/heating)	kWh/a	405/1871	468/2756	436/1996	459/2703	436/1996	459/2703	437/1997	510/2766	377/1786	475/1972	555/2826
Refrigerant (GWP)		R410A (1975)										
Designated heating season		Average										

OUTDOOR UNIT DIMENSIONS (unit:mm)

FDC100VNX, 100VSX, 125VNX, 125VSX, 140VNX, 140VSX

Mark	Item	
A	Service valve connection of the attached connecting pipe(gas side)	ø15.88(5/8")(Flare)
B	Service valve connection(liquid side)	ø9.52(3/8")(Flare)
C	Pipe/cable draw-out hole	
D	Drain discharge hole	ø20x3places
E	Anchor bolt hole	M10x4places
F	Cable draw-out hole	ø30(front) ø45(side) ø50(back)

Notes:
(1) It must not be surrounded by walls on the four sides.
(2) The unit must be fixed with anchor bolts. An anchor bolt must not protrude more than 15mm.
(3) Where the unit is subject to strong winds, lay it in such a direction that the blower outlet faces perpendicularly to the dominant wind direction.
(4) Leave 1m or more space above the unit.
(5) A wall in front of the blower outlet must not exceed the units height.
(6) The model name label is attached on the lower right corner of the front panel.
(7) Connect the Service valve with local pipe by using the pipe of the attachment. (Gas side only)

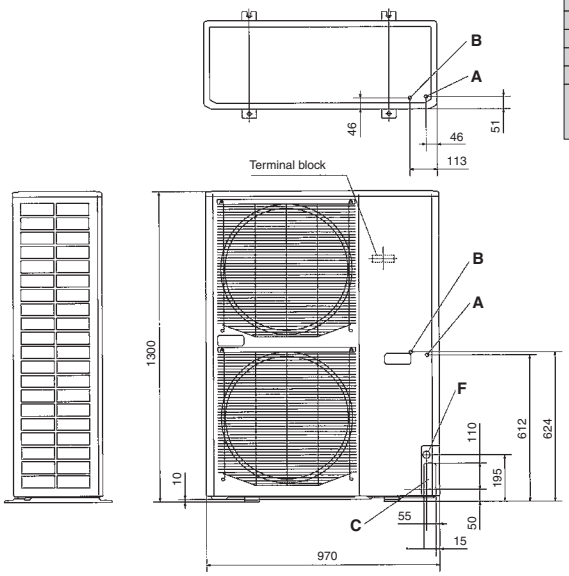

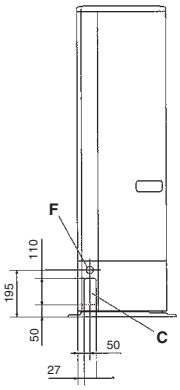

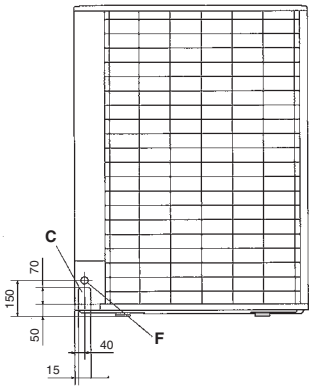

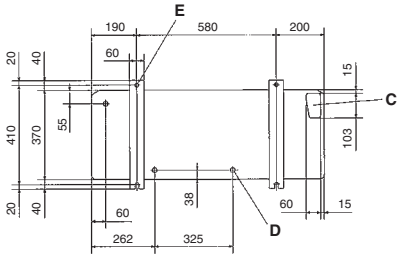

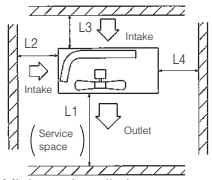

Minimum installation space

Examples of installation / Dimensions	1	2	3
L1	Open	Open	500
L2	300	5	Open
L3	150	300	150
L4	5	5	5

SRC40ZMX-S, 50ZMX-S, 60ZMX-S

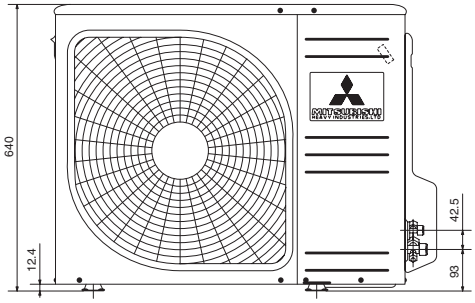

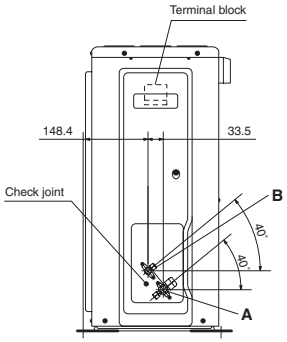

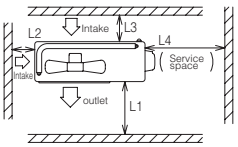

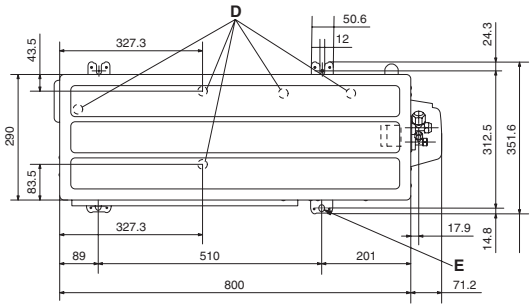

Examples of installation / Dimensions	1	2	3
L1	Open	280	280
L2	100	75	Open
L3	100	80	80
L4	250	Open	250

Mark	Item	
A	Refrigerant gas side pipe connection tap	ø12.7(flare)
B	Refrigerant liquid side pipe connection tap	ø6.35(flare)
D	Drain discharge port	Ø20.5x5places
E	Anchor bolt hole	M10x4places

Notes:
(1) It must not be surrounded by walls on the four sides.
(2) The unit must be fixed with anchor bolts.An anchor bolt must not protrude more than 15mm.
(3) Where the unit is subject to strong winds, lay it in such a direction that the blower outlet faces perpendicularly to the dominant wind direction.
(4) Leave a 1m or larger space above the unit.
(5) A wall in front of the blower outlet must not exceed the units height.
(6) The unit name plate is attached on the lower right corner of the front panel.

FDC71VNX

Mark	Item	
A	Service valve connection (gas side)	ø15.88(5/8") (Flare)
B	Service valve connection (liquid side)	ø9.52(3/8") (Flare)
C	Pipe/cable draw-out hole	
D	Drain discharge hole	ø20x3places
E	Anchor bolt hole	M10x4places

Notes:
(1) It must not be surrounded by walls on the four sides.
(2) The unit must be fixed with anchor bolts. An anchor bolt must not protrude more the 15mm.
(3) Where the unit is subject to strong winds, lay it in such a direction that the blower outlet faces perpendicularly to the dominant wind direction.
(4) Leave 1m or more space above the unit.
(5) A wall in front of the blower outlet must not exceed the units height.
(6) The model name label is attached on the lower right corner of the front.

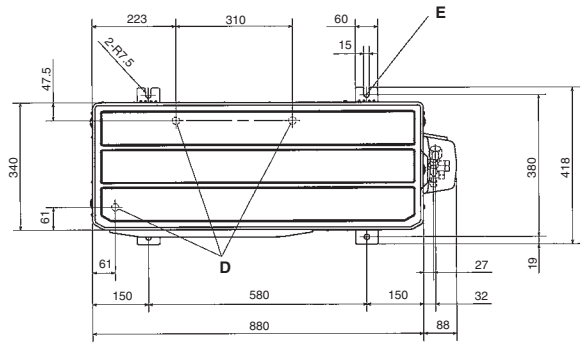

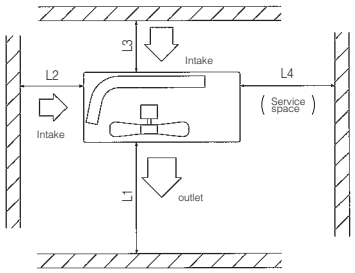

Minimum installation space

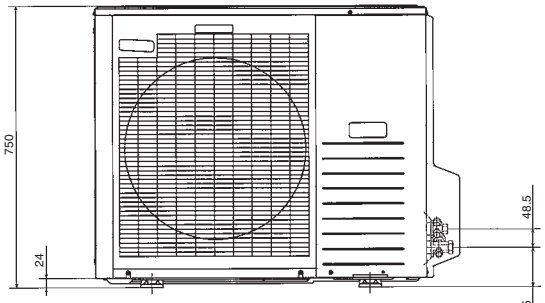

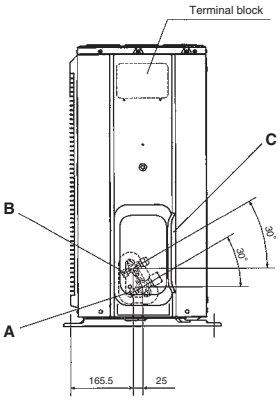

Examples of installation / Dimensions	1	2	3
L_1	Open	Open	500
L_2	300	250	Open
L_3	100	150	100
L_4	250	250	250

FDC100VN, 125VN, 140VN
100VS, 125VS, 140VS

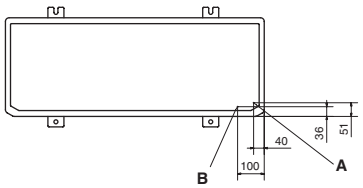

Mark	Item	
A	Refrigerant gas side pipe connection tap	ø15.88(flare)
B	Refrigerant liquid side pipe connection tap	ø9.52(flare)
C	Pipe/cable draw-out port	
D	Drain discharge port	ø20.3x3places
E	Anchor bolt hole	M10x4places
F	Cable draw-out port	ø30.3x3places

Notes:
(1) It must not be surrounded by walls on the four sides.
(2) The unit must be fixed with anchor bolts.An anchor bolt must not protrude more than 15mm.
(3) Where the unit is subject to strong winds, lay it in such a direction that the blower outlet faces perpendicularly to the dominant wind direction.
(4) Leave a 1m or larger space above the unit.
(5) A wall in front of the blower outlet must not exceed the units height.
(6) The unit name plate is attached on the lower right corner of the front panel.

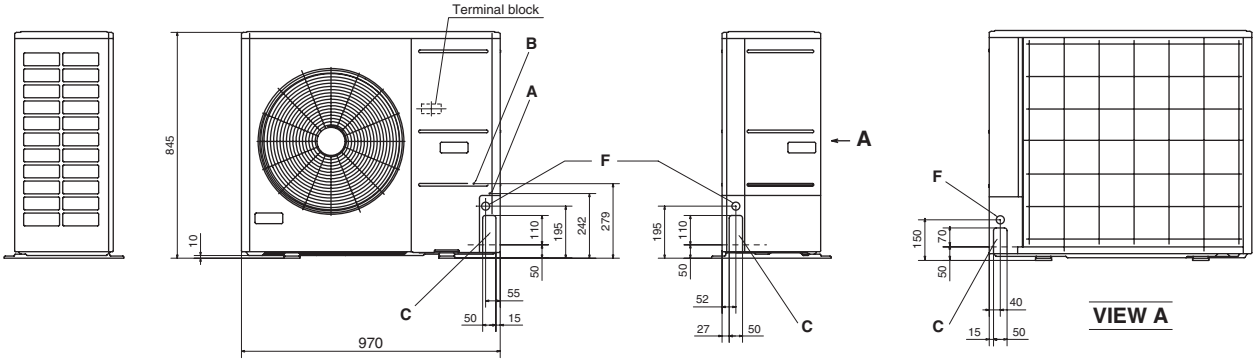

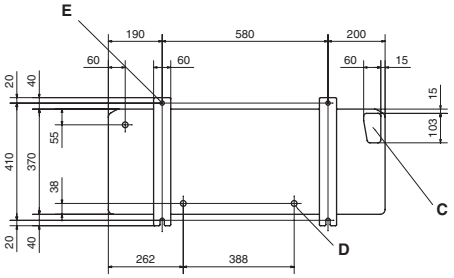

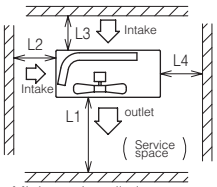

Minimum installation space

Examples of installation / Dimensions	1	2	3
L_1	Open	Open	500
L_2	300	5	Open
L_3	150	300	150
L_4	5	5	5

OUTDOOR UNIT DIMENSIONS (unit:mm)

FDC200VS

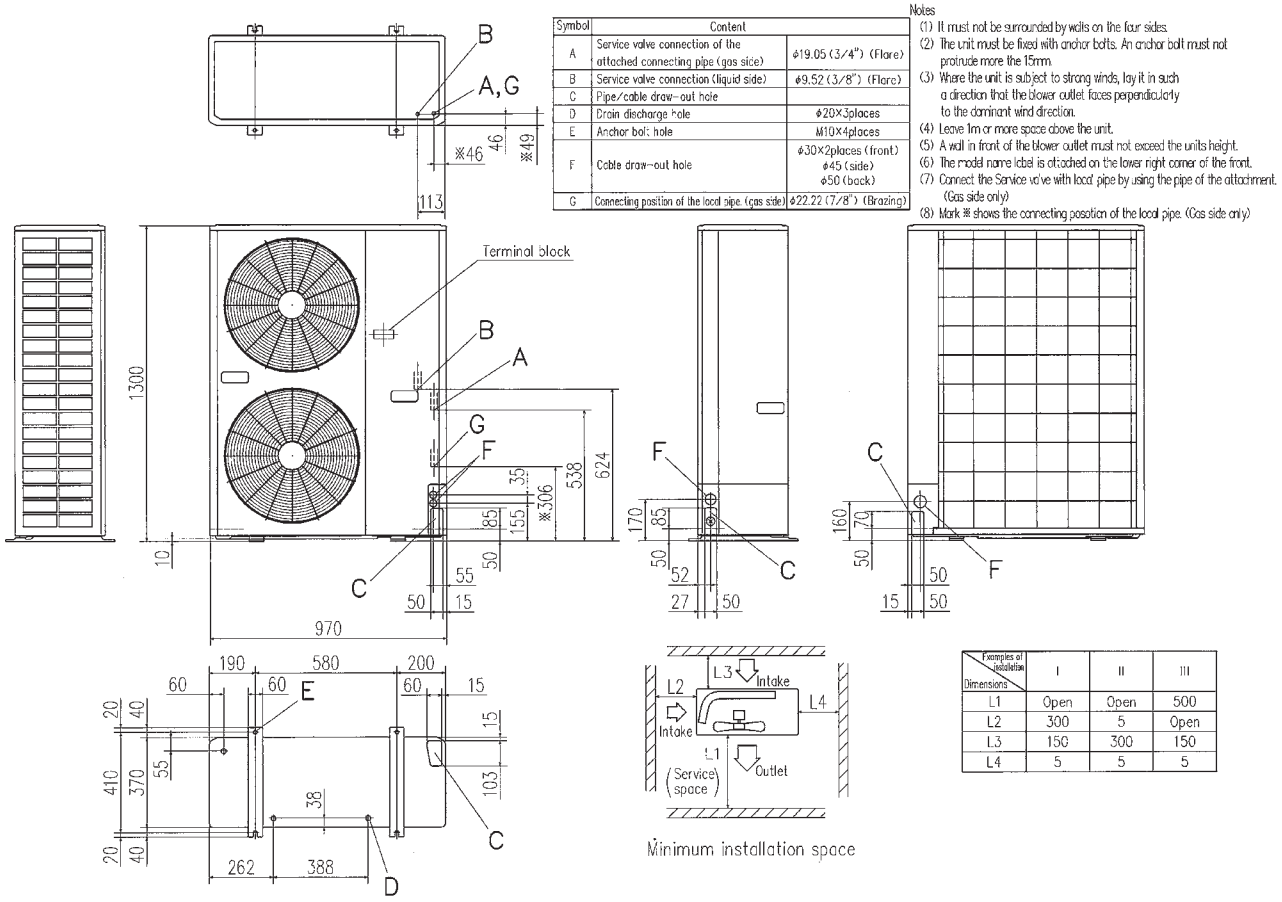

Symbol	Content	
A	Service valve connection of the attached connecting pipe (gas side)	ϕ19.05 (3/4") (Flare)
B	Service valve connection (liquid side)	ϕ9.52 (3/8") (Flare)
C	Pipe/cable draw-out hole	
D	Drain discharge hole	ϕ20×3places
E	Anchor bolt hole	M10×4places
F	Cable draw-out hole	ϕ30×2places (front) ϕ45 (side) ϕ50 (back)
G	Connecting position of the local pipe. (gas side)	ϕ22.22 (7/8") (Brazing)

Notes
(1) It must not be surrounded by walls on the four sides.
(2) The unit must be fixed with anchor bolts. An anchor bolt must not protrude more the 15mm.
(3) Where the unit is subject to strong winds, lay it in such a direction that the blower outlet faces perpendicularly to the dominant wind direction.
(4) Leave 1m or more space above the unit.
(5) A wall in front of the blower outlet must not exceed the units height.
(6) The model name label is attached on the lower right corner of the front.
(7) Connect the Service valve with local pipe by using the pipe of the attachment. (Gas side only)
(8) Mark ※ shows the connecting position of the local pipe. (Gas side only)

Examples of installation / Dimensions	I	II	III
L1	Open	Open	500
L2	300	5	Open
L3	150	300	150
L4	5	5	5

FDC250VS

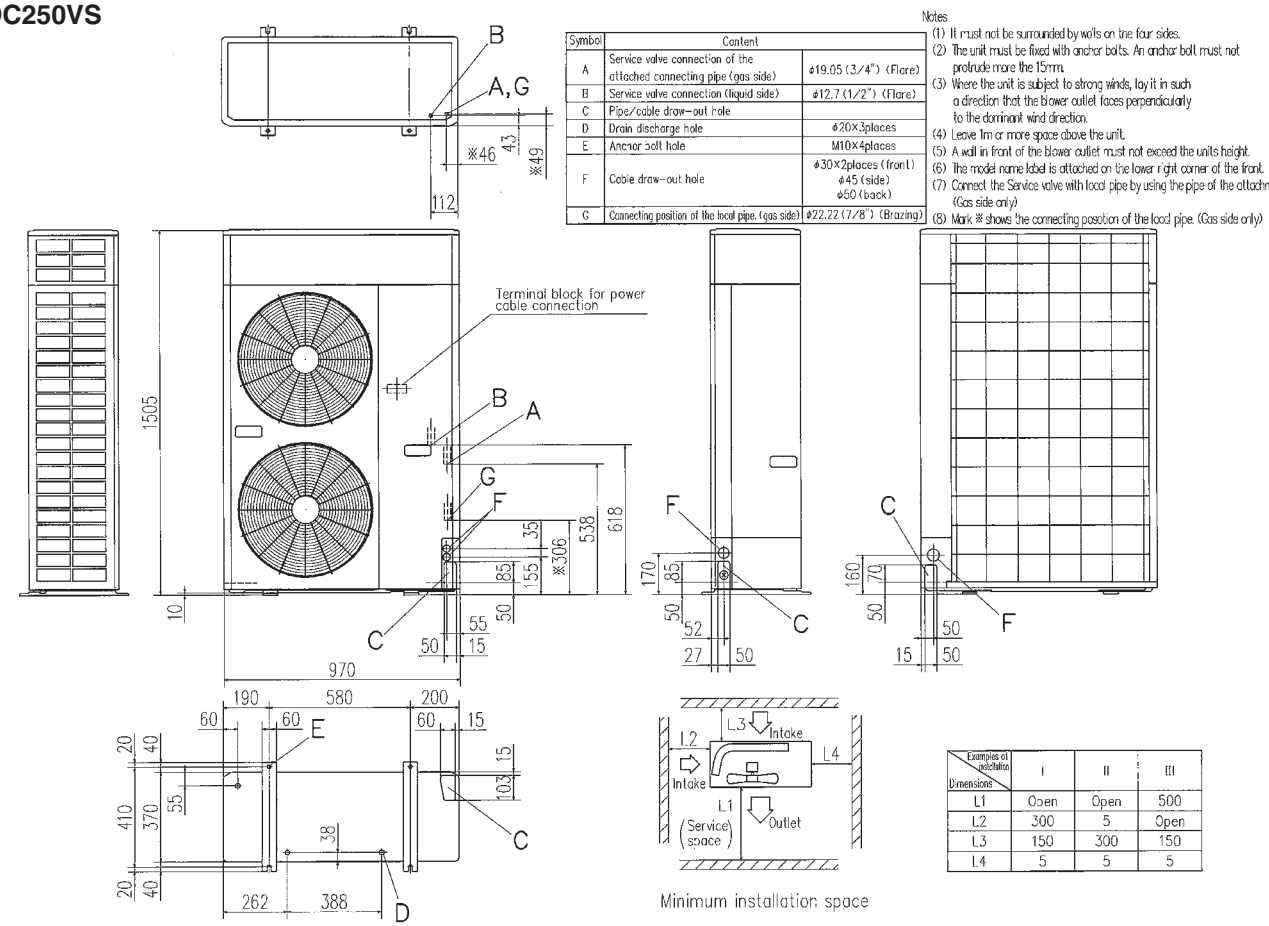

Symbol	Content	
A	Service valve connection of the attached connecting pipe (gas side)	ϕ19.05 (3/4") (Flare)
B	Service valve connection (liquid side)	ϕ12.7 (1/2") (Flare)
C	Pipe/cable draw-out hole	
D	Drain discharge hole	ϕ20×3places
E	Anchor bolt hole	M10×4places
F	Cable draw-out hole	ϕ30×2places (front) ϕ45 (side) ϕ50 (back)
G	Connecting position of the local pipe. (gas side)	ϕ22.22 (7/8") (Brazing)

Notes
(1) It must not be surrounded by walls on the four sides.
(2) The unit must be fixed with anchor bolts. An anchor bolt must not protrude more the 15mm.
(3) Where the unit is subject to strong winds, lay it in such a direction that the blower outlet faces perpendicularly to the dominant wind direction.
(4) Leave 1m or more space above the unit.
(5) A wall in front of the blower outlet must not exceed the units height.
(6) The model name label is attached on the lower right corner of the front.
(7) Connect the Service valve with local pipe by using the pipe of the attachment. (Gas side only)
(8) Mark ※ shows the connecting position of the local pipe. (Gas side only)

Examples of installation / Dimensions	I	II	III
L1	Open	Open	500
L2	300	5	Open
L3	150	300	150
L4	5	5	5

FDC71VNP

Symbol	Content	
A	Service valve connection (gas side)	ϕ12.7 (1/2") (Flare)
B	Service valve connection (liquid side)	ϕ6.35 (1/4") (Flare)
C	Pipe/cable draw-out hole	
D	Drain discharge hole	ϕ20×5places
E	Anchor bolt hole	M10×4places

Notes
(1) It must not be surrounded by walls on the four sides.
(2) The unit must be fixed with anchor bolts. An anchor bolt must not protrude more than 15mm.
(3) Where the unit is subject to strong winds, lay it in such a direction that the blower outlet faces perpendicularly to the dominant wind direction.
(4) Leave 1m or more space above the unit.
(5) A wall in front of the blower outlet must not exceed the units height.
(6) The model name label is attached on the lower right corner of the front panel.

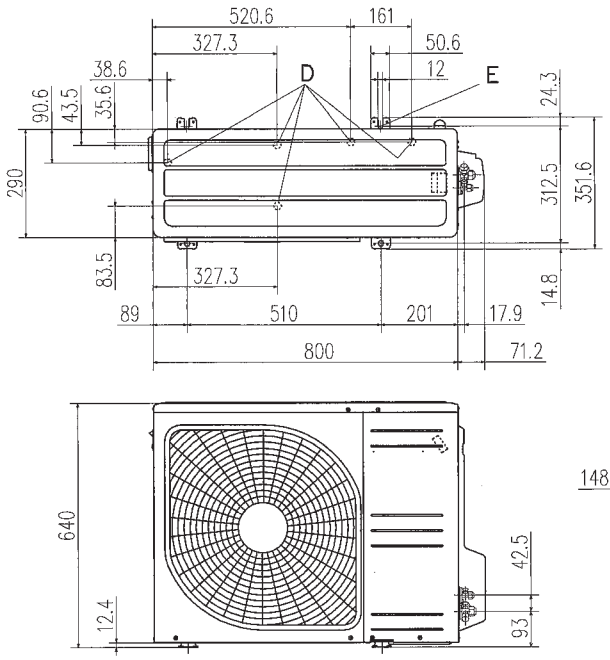

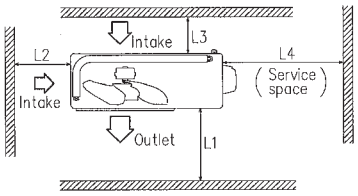

Minimum installation space

Examples of installation / Dimensions	I	II	III	IV
L1	Open	280	280	180
L2	100	75	Open	Open
L3	100	80	80	80
L4	250	Open	250	Open

FDC90VNP

Symbol	Content	
A	Service valve connection (gas side)	ϕ15.88 (5/8") (Flare)
B	Service valve connection (liquid side)	ϕ6.35 (1/4") (Flare)
C	Pipe/cable draw-out hole	
D	Drain discharge hole	ϕ20 x 3 places
E	Anchor bolt hole	M10 x 4 places

Note
(1) It must not be surrounded by walls on four sides.
(2) The unit must be fixed with anchor bolts. An anchor bolt must not protrude more than 15mm.
(3) Where the unit is subjected to strong winds, lay it in such a direction that the blower outlet faces perpendicularly to the dominant wind direction.
(4) Leave 1m or more space above the unit.
(5) A wall in front of the blower outlet must not exceed the unit's height.
(6) The model name label is attached on the lower right corner of the front panel.

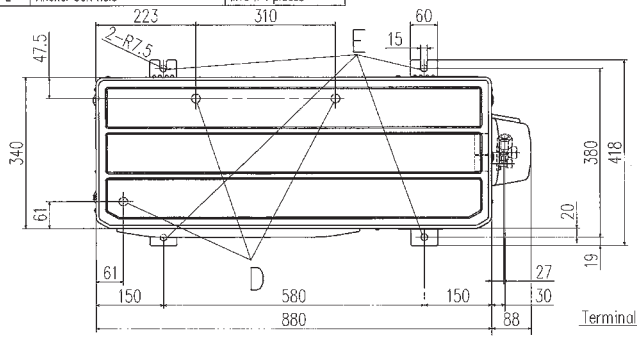

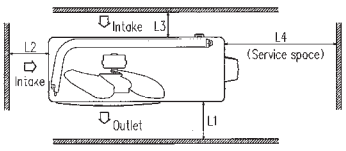

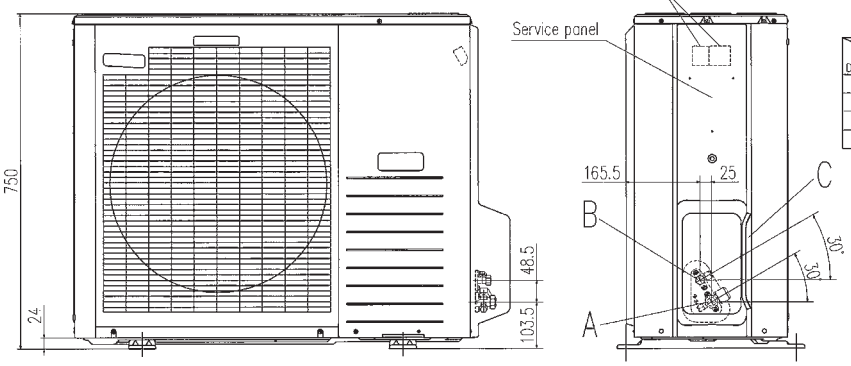

Minimum installation space

Examples of installation / Dimensions	I	II	III
L1	Open	Open	500
L2	300	250	Open
L3	100	150	100
L4	250	250	250

Before starting use

Heating performance
The heating performance values (kW) described in catalog are the values obtained by operating at an outdoor temperature of 7℃ and indoor temperature of 20℃ as set forth in the ISO Standards. As the heating performance decreases as the outdoor temperature drops, if the outdoor temperature is too low and the heating performance is insufficient, use other heating appliances as well.

Indication of sound values
The sound values are the values (A scale) measured in a chamber such as an anechoic chamber following the ISO Standards. In the actual installation state, the value is normally larger than the values given in the catalog due to the effect of surrounding noise and echo. Take this into consideration when installing.

Use in oil atmosphere
Avoid installing this unit in as atmosphere where oil scatters or builds up, such as in a kitchen or machine factory.
If the oil adheres to the heat exchanger, the heat exchanging performance will drop, mist may be generated, and the synthetic resin parts may deform and break.

Use in acidic or alkaline atmosphere
If this unit is used in acidic atmosphere such as hot spring areas having high level of sulfuric gases or in alkaline atmosphere including ammonia or calcium chloride, places where the exhaust of the heat exchanger is sucked in, or at coastal areas where the unit is subject to salt breezes, the outer plate or heat exchanger, etc., will corrode. Please ask a dealer or specialist when you use an air conditioner in places differing from a general atmosphere.

Use in places with high ceilings
If the ceiling is high, install a circulator to improve the heat and air flow distribution when heating.

Refrigerant leakage
The refrigerant (R410A) used for Air conditioner is non-toxic and inflammable in its original state.
However, in consideration of a state where the refrigerant leaks into the room, measures against refrigerant leaks must be taken in small rooms where the tolerable level could be exceeded. Take measures by installing ventilation devices, etc.

Use in snowy areas
Take the following measures when installing the outdoor unit in snowy areas.

·Snow prevention
Install a snow-prevention hood so that the snow does not obstruct the air intake port or enter and freeze in the outdoor unit.

·Snow piling
In areas with heavy snow fall, the piled snow could block the air intake port. In this case, a frame that is 50cm or higher than the estimated snow fall must be installed underneath the outdoor unit.

Automatic defrosting device
If the temperature is low, and the humidity is high, frost will stick to the heat exchanger of the outdoor unit. If use is continued, the heating performance will drop.
The "Automatic defrosting device" will function to remove this frost.
After heating for approx, three to ten minutes, it will stop, and the frost will be removed. After defrosting, hot air will be blown again.

Servicing the air-conditioner
After the air-conditioner is used for several seasons, dirt will build up in the air-conditioner causing the performance to drop. In addition to regular servicing, we recommend the maintenance contract (charged for) by a specialist.

⚠ Safety Precautions

Air-conditioner usage target
The air-conditioner described in this catalog is a dedicated cooling/heating device for human use.
Do not use it for special applications such as the storage of foodstuffs, animals or plants, precision devices or valuable art, etc.
This could cause the quality of the items to drop, etc.
Do not use this for cooling vehicles or ships. Water leakage or current leaks could occur.

Before use
Always read the "User's Manual" thoroughly before starting use.

Installation
Always commission the installation to a dealer or specialist. Improper installation will lead to water leakage, electric shocks and fires.
Make sure that the outdoor unit is stable in installation. Fix the unit to stable base.

Usage place
Do not install in places where combustible gas could leak or where there are sparks.
Installation in a place where combustible gas could be generated, flow or accumulate, or places containing carbon fibers could lead to fires.

MITSUBISHI HEAVY INDUSTRIES, LTD.

Mitsubishi Heavy Industries, Ltd.
Air-Conditioning & Refrigeration Systems
16-5, Konan 2-chome, Minato-ku, Tokyo, 108-8215 Japan
http://www.mhi.co.jp

Our factories are ISO9001 and ISO14001 certified.

Certified ISO 9001

BIWAJIMA PLANT
Mitsubishi Heavy Industries, Ltd.
Air-conditioning & Refrigeration Systems Headquarters
Certificate number : JQA-0709

MITSUBISHI HEAVY INDUSTRIES-MAHAJAK AIR CONDITIONERS CO., LTD.
Certificate Number : 04100 1998 0813

Mitsubishi Heavy Industries-Haier (Quingdao) Air-conditioners Co.,Ltd.
Certificate Number : 5170-1996-AQ-RCG-RvA

Certified ISO 14001

MITSUBISHI HEAVY INDUSTRIES-MAHAJAK AIR CONDITIONERS CO.,LTD.
Certificate Number : 04104 1998 0813 E5

Mitsubishi Heavy Industries-Haier (Quingdao) Air-conditioners Co.,Ltd.
Certificate number : 01-1998-083

(COMPANY) participates in the ECC programme for (PROGRAMME).
Check ongoing validity of certificate:
www.eurovent-certification.com or
www.certiflash.com

HB91-14P01E October 2013 R

Because of our policy of continuous improvement, we reserve right to make changes in all specifications without notice.

Edited in Japan