BGB Marine
Underwater Light & Vision

Issue M06 07.02.11

Aqualux Stainless Steel

Underwater lighting for the nuclear and water treatment industries

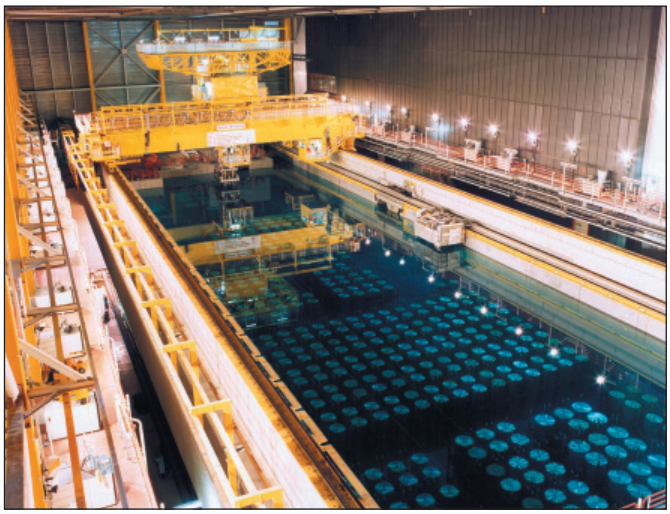

PHOTO CREDIT: B.N.F.L. PUBLIC AFFAIRS

Aqualux is a system of underwater lighting equipment based on a series of parabolic, aluminised, reflector (PAR) lamps designed for direct immersion.

A watertight power connector cap is bonded to the hard glass envelope, obviating potentially troublesome seals and facilitating easy lamp replacement. The mating connector is of a type employed in deep diving equipment and moulded directly to the power feed cable and the union is secured by a stainless steel locking sleeve. This technique is applied, as standard, to PAR 56 & 64 envelopes embodying 500 and 1,000 watt, long-life, tungsten-halogen capsules and may be used on special, discharge sources.

Protection of lamps and universal orientation is afforded by “free flooding”, stainless steel luminaires. These are relatively light in weight and provided with a bright, polished finish to facilitate decontamination. The system includes stainless steel lampguards. Lamps are retained in luminaires by a bezel, secured with four captive, winged screws. No tools are required for lamp replacement. All standard lamps are designed for universal orientation and since beam patterns range from spot to wide flood, Aqualux may be applied to a broad spectrum of tasks. The longevity of lamps within the TH-120 range, renders the system of particular value in applications demanding low maintenance.

Suspension chain assemblies may be used for luminaires required to project vertically downward and the addition of a yoke assembly affords universal orientation. The latter may be mounted on a deployment pole, secured above the surface of the water for easy retrieval.

> Up to I.P. 68
> 30m depth

More...

T: +44 (0) 1476 576280 **F:** +44 (0) 1476 561557 **E:** mail@bgbmarine.com **W:** www.bgbmarine.com

BGB Innovation and BGB Marine are trading styles of BGB Engineering Ltd. Dysart Road, Grantham, Lincolnshire NG31 7NB UK

BGB INNOVATION

Technical Data

Issue M06 07.02.11

Lamps

	PAR56	PAR64
D	179mm	204mm
L (nom)	160mm	175mm
d	65mm	65mm

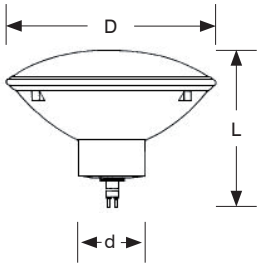

Max operating depth: 30 metres (3 bar).
Materials: hard glass envelope, high impact polystyrene cap and plated brass contacts.

Cautions:

> Lamps must be fully immersed during operation
> Lamps must be mounted by the lens rim only
> AQUALUX lamps are not suitable for swimming pools

THE TH-120 TUNGSTEN-HALOGEN RANGE

ENVELOPE	REFERENCE	VOLTS/WATTS	BEAM PATTERN	
PAR 56	AQ 500 P56SP-120L	120/500	SPOT	13° X 8°
PAR 56	AQ 500 P56MF-120L	120/500	MED. FLOOD	26° X 10°
PAR 56	AQ 500 P56WF-120L	120/500	WIDE FLOOD	44° X 20°
PAR 64	AQ 1000 P64SP-120L	120/1000	SPOT	11° X 14°
PAR 64	AQ 1000 P64MF-120L	120/1000	MED. FLOOD	28° X 12°
PAR 64	AQ 1000 P64WF-120L	120/1000	WIDE FLOOD	40° X 24°

COLOUR TEMPERATURE: 2,950° K AVERAGE LIFE: 4,000 HOURS

BURNING POSITION: UNIVERSAL.

Luminaires

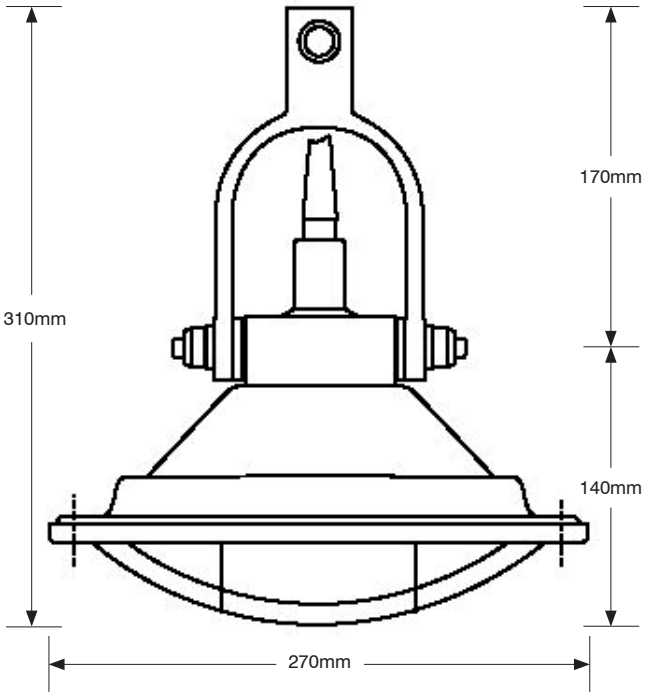

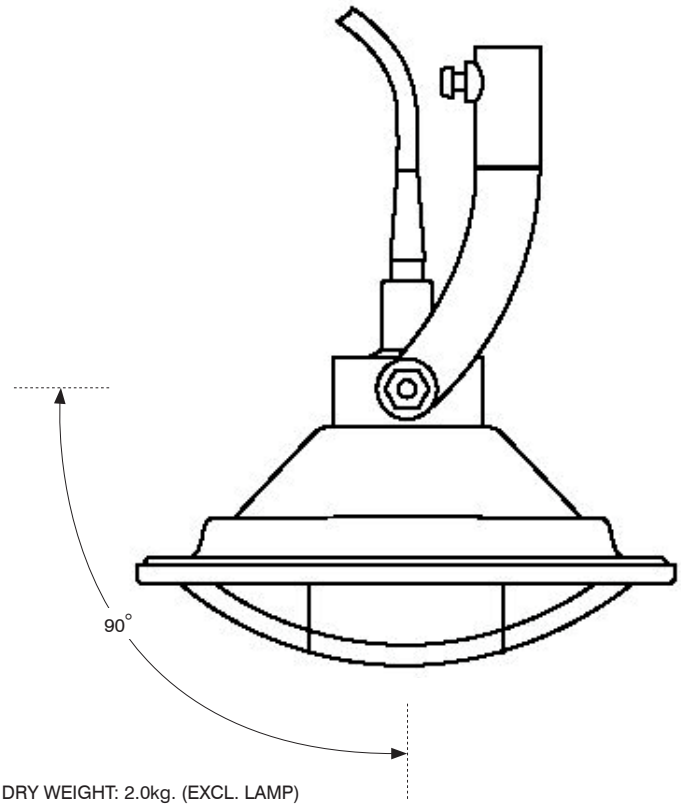

YOKE SOCKET: 15mmØ X 38mm deep. DRY WEIGHT: 2.0kg. (EXCL. LAMP)

MATERIALS

> Spun components, fasteners and yoke assembly: stainless steel (316)
> Lenseguard: stainless steel (304)
> Bezel seating, cup washers: neoprene
> Yoke washers: high impact polystyrene
> Cable and in-line connector assembly: copper conductors with EPR insulation and neoprene jacket, brass connector receptacles, neoprene moulding and stainless steel (316) locking sleeve

POWER SUPPLIES

Filament lamps should be fed via an isolating transformer, with an appropriately rated residual current device (R.C.D.) and fuses, or miniature circuit breakers (M.C.B.) in the output circuit. The secondary winding of the transformer should be centre tapped to earth as a further safety measure.

More...

T: +44 (0) 1476 576280 **F:** +44 (0) 1476 561557 **E:** mail@bgbmarine.com **W:** www.bgbmarine.com

BGB Innovation and BGB Marine are trading styles of BGB Engineering Ltd. Dysart Road, Grantham, Lincolnshire NG31 7NB UK

BGB INNOVATION

Deployment

Issue M06 07.02.11

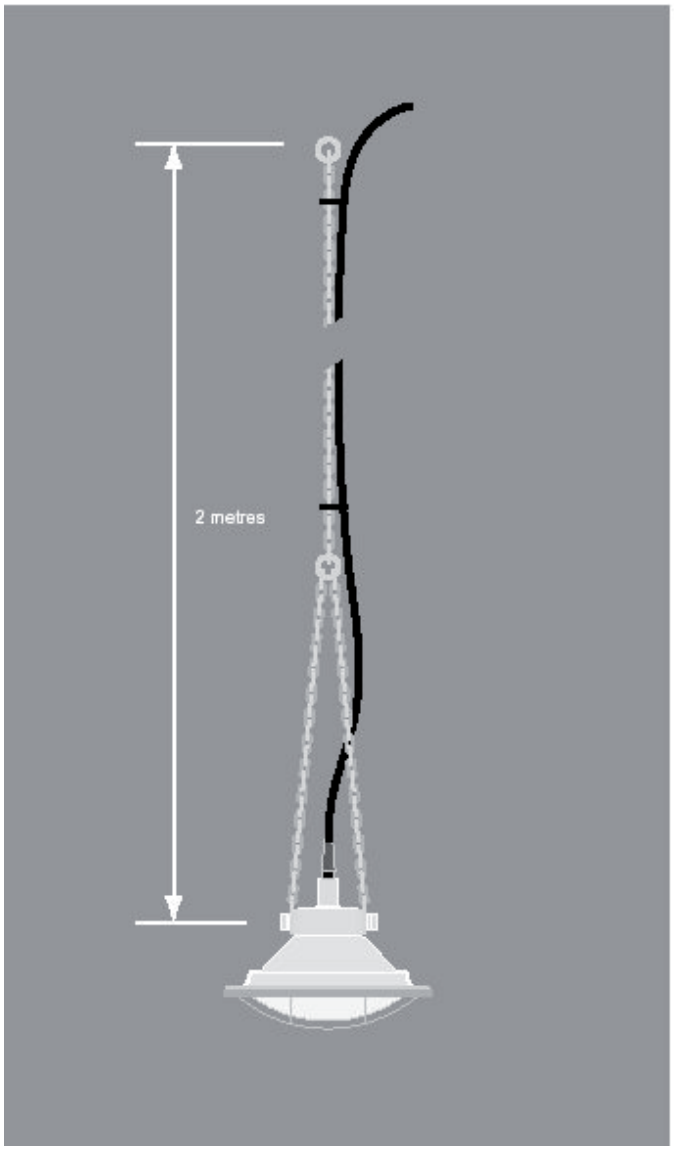

Suspension chain assembly

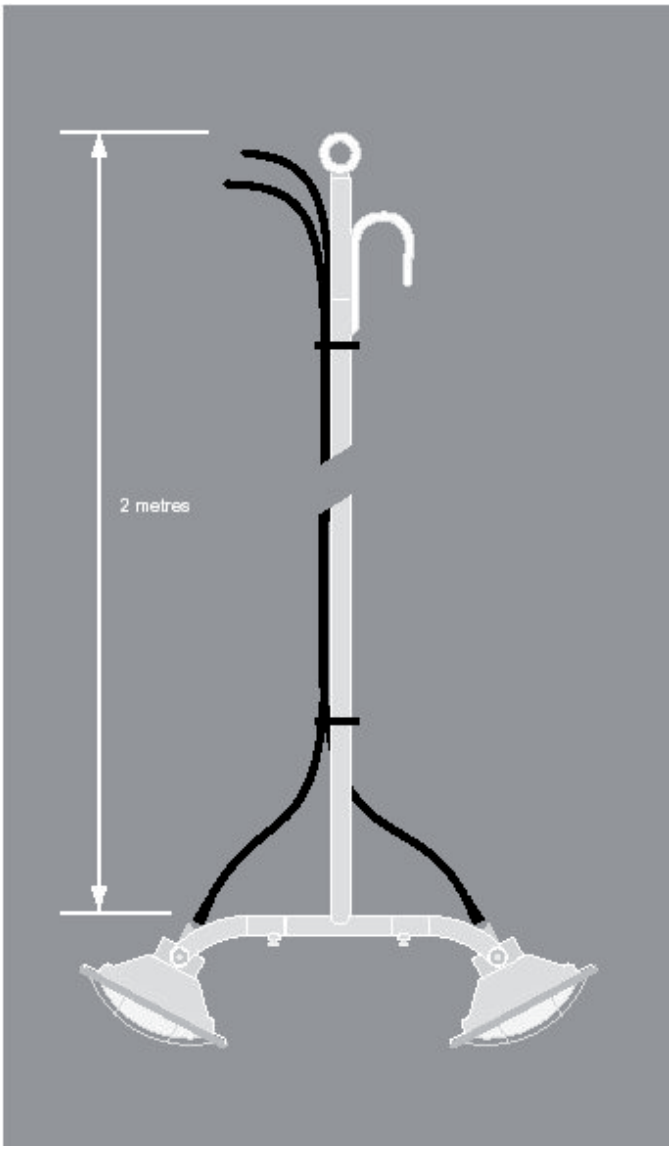

Twin luminaire pole assembly

ORDERING ADVICE

The following descriptions should be used when placing orders:-
Lamps may be described by reference codes (see table).
Luminaires
> For PAR 56 lamps: ¦ FF .PAR56 Luminaire assembly with lampguard. ¦ FF .PAR56 Luminaire assembly with lampguard and yoke assembly
> For PAR 64 lamps: ¦ FF .PAR64 Luminaire assembly with lampguard. ¦ FF .PAR64 Luminaire assembly with lampguard and yoke assembly
Common Components: RMG Connector assembly (cable length as requested).
Two metre, twin luminaire deployment pole. Two metre chain suspension assembly.
Special cable harnesses and mouldings, power supply units and lamp ballasts to customer specification.

Caution: Aqualux lamps and luminaires are not suitable for use in swimming pools or diving operations.

AQUALUX lamps are based on standard products by The Lighting Division of THE GENERAL ELECTRIC COMPANY of Cleveland, Ohio, together with 'specials' created by enclosing various light sources within standard P.A.R. glassware by that Company. The development of AQUALUX has been carried out within the U.K. and its marketing under that name is endorsed by G.E., which is now merged with TUNGSRAM and THORN LIGHTING to form G.E. LIGHTING.

T: +44 (0) 1476 576280 **F:** +44 (0) 1476 561557 **E:** mail@bgbmarine.com **W:** www.bgbmarine.com

BGB Innovation and BGB Marine are trading styles of BGB Engineering Ltd. Dysart Road, Grantham, Lincolnshire NG31 7NB UK

BGB INNOVATION