Model 841 - Single Channel
Model 842 - Two Channel

User Instructions

CAUTION:
The unit operates at mains voltage and should only be opened by a qualified engineer after disconnection from the mains supply.

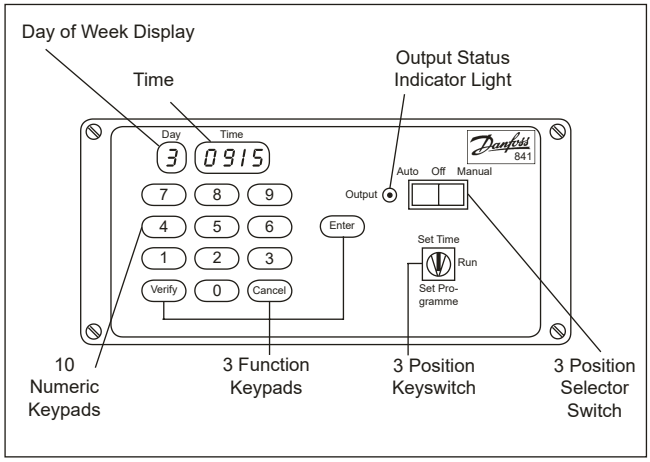

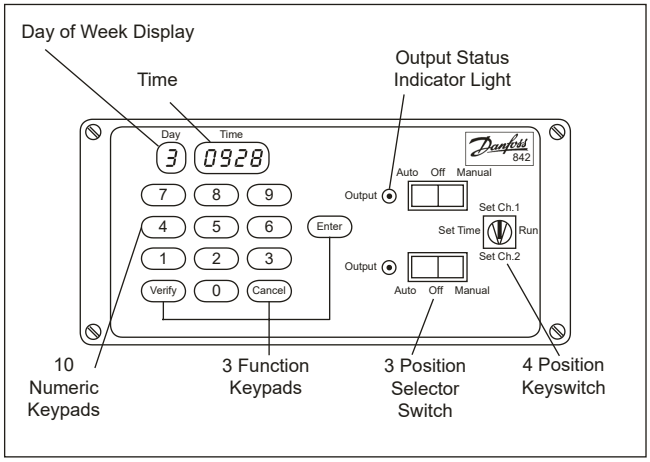

DESCRIPTION

Model 841 is a single channel unit.

Model 842 us a two channel unit. The two channels operate totally independently of each other and can have different programmes set.

Both the models have a number of common features as described below:

The **Day** and **Time** are displayed as five digits on the liquid crystal display (LCD)

The first digit in its separate window marked **Day** will be numerical from 1 to 7 which may be allocated in sequence to the days of the week at the user's discretion. The normal convention is Monday = 1, Tuesday = 2 ..... Sunday = 7.

The remaining four digits in the window marked **Time** will display the time to a resolution of one minute from 0000 to 2359.

A short 'bleep' will be heard if a keypad is pressed. In addition when a numeric keypad is pressed the associated digit on the LCD will either blink or change.

The 3 position selector switch (one for each channel on Model 842) may be set to **Off** to override the programmes or may be set to **Auto** to follow the programme which has been set, the third position marked **Manual** is a continuous ON but only as long as the switch is held down.

The output status indicator light will be illuminated when the selector switch is at **Auto** and a programme event occurs, or when the selector switch is held in the **Manual** position.

The unit can be set at time of installation to provide either an On duration from 1 to 15 seconds in half second pulses, or a continuous pulse from 1 to 15 seconds. (In the case of Model 842 each channel can be set to different pulse types but of the same duration).

It is recommended that the key be removed from the keyswitch to prevent unauthorised or accidental changes to the settings. The key can only be removed when in **Run** position.

TIME OF DAY

The mains electricity supply must be ON, the key inserted and turned to **Set Time** position before carrying out the operations detailed below.

When the timeswitch is first connected, or when the battery has been allowed to discharge fully, and the mains electricity supply is switched ON a dash (-) will be displayed in each of the five digit positions.

Decide which day of the week you wish to assign as Day 1.

Press the number key representing the current day of the week (listen for the 'bleep').

Key in the time using four keypads e.g. 8:30 a.m. must be keyed as

0 8 3 0

and 6:15 p.m. as

1 8 1 5

The unit will not allow the entry of a spurious day or time e.g. day 8 will not be accepted nor will a time entry of 3600. Depression of an out of range key will not register on the display; the LCD digit will blink but remain unchanged until an acceptable number is keyed.

DO NOT PRESS ANY FUNCTION KEYPADS.

Returning the key to the Run position will enter the time shown on the display.

SETTING SWITCHING TIMES

The mains electricity supply must be ON, the key inserted and turned to either the **Set Programme** position (Model 841) or **Set Channel 1** position (Model 842) before carrying out any operations detailed below.

Initially the display will show

E EEEE

indicating that the memory is empty.

Since the timeswitch is capable of automatically carrying out up to 200 switching operations it is recommended that the required programme be tabulated before setting is commenced, noting that the day number on display is the current day of the week. A table is provided for this purpose. In addition, facilities are provided to record the programme(s) entered on the enclosed card, which can be located adjacent to the unit if required.

It is not essential to key in the programme in sequence since it will automatically be sorted into chronological order.

To set a programme event:

First press the number key representing the day of the week to be programmed.

Secondly, key in the time using four numeric keypads in the range 0000 to 2359.

Finally press (Enter) to enter the required event into the memory.

The unit will not allow the entry of a spurious day or time e.g. day 8 will not be accepted nor will a time entry of 3600. Depression of an out of range key will not register on the display; the LCD digit will blink but remain unchanged until an acceptable number is keyed.

Proceed with the programming of every event using the same entry sequence.

If an attempt is made to exceed 200 programme events then the display will show

F FFFF

indicating that the memory is full.

If an incorrect key is pressed then press the (Cancel) key and re-commence the sequence.

If a programme event is repeated at the same time on different days then the keying may be simplified as follows.

Key in the first event using the normal entry sequence. Now simply key in the new day number and then (Enter).

For Model 842 only: Having completed the programme setting for Channel 1, turn the key to Set Channel 2 and enter the programme required for this channel in the same manner.

Note: The 200 switching operations are able to be freely spread over both channels. If a common event time is required on both channels this represents only one switching operation.

The complete programme may be checked by the use of the (Verify) key. Each press of this key will advance the programme by one event allowing a complete review in chronological sequence commencing from the day and time on display. If a particular day's programme is to be reviewed then key the day number followed by

0 0 0 0 & Verify

when the first programmed event for that day will be displayed then proceed with repeated presses of the (Verify) key.

When re-programming one or more events, unwanted events must be cleared by advancing to the event in question using the (Verify) key as explained above and then clearing it by a single press on the (Cancel) key.

In the case of Model 842 both the Verify and Cancel functions apply only to the channel selected by the keyswitch at that time.

To clear the entire programme on both channels, press and hold down the (Cancel) key for approx. 3 seconds until the display shows

E EEEE

On completion of programming return the key to **Run** and the selector switch(es) to **Auto**.

BATTERY RESERVE

The unit does not rely on the internal battery in order to work satisfactorily providing the mains power supply is connected to the unit. The battery is fitted purely to memorise the Time of Day and selected Switching Times in the event of a power failure or disconnection of supply.

When the unit is first connected it will require a minimum of 24 hours to become sufficiently charged in order to perform this memory function. Thereafter the battery is automatically recharged.

If the mains power supply is lost, for any reason, the display on the unit will go out. The battery will maintain the memory for a period of up to 3 months during this condition. When the power supply is restored, the unit will automatically switch on again and resume the set programme without any resetting being necessary.

Example	Monday		Tuesday		Wednesday		Thursday		Friday		Saturday		Sunday	
Assigned Day No.	1		2		3		4		5		6		7	
	CH1	CH2	CH1	CH2	CH1	CH2	CH1	CH2	CH1	CH2	CH1	CH2	CH1	CH2
Event Time	0845	0845	0845	0845	0845	0845	0845	etc.	etc.	etc.	etc.	etc.	etc.	etc.
	0910	0910	0900	0900	0900		0900							
	0925	0915			0915		1230							
	1300	1230	1300	1230	1330	1530	1530							
			1530		1530									

	Monday		Tuesday		Wednesday		Thursday		Friday		Saturday		Sunday	
Assigned Day No.														
	CH1	CH2	CH1	CH2	CH1	CH2	CH1	CH2	CH1	CH2	CH1	CH2	CH1	CH2
Event Time														

Danfoss Randall can accept no responsibility for possible errors in catalogues, brochures and other printed material. Danfoss Randall reserves the right to alter its products without notice. This also applies to products already on order provided that such alterations can be made without subsequent changes being necessary in specifications already agreed.

Danfoss Randall Ltd,
Ampthill Road,
Bedford MK42 9ER
Tel: (01234) 364621 Fax: (01234) 219705
Email: danfossrandall@danfoss.com
Website: www.danfoss-randall.co.uk