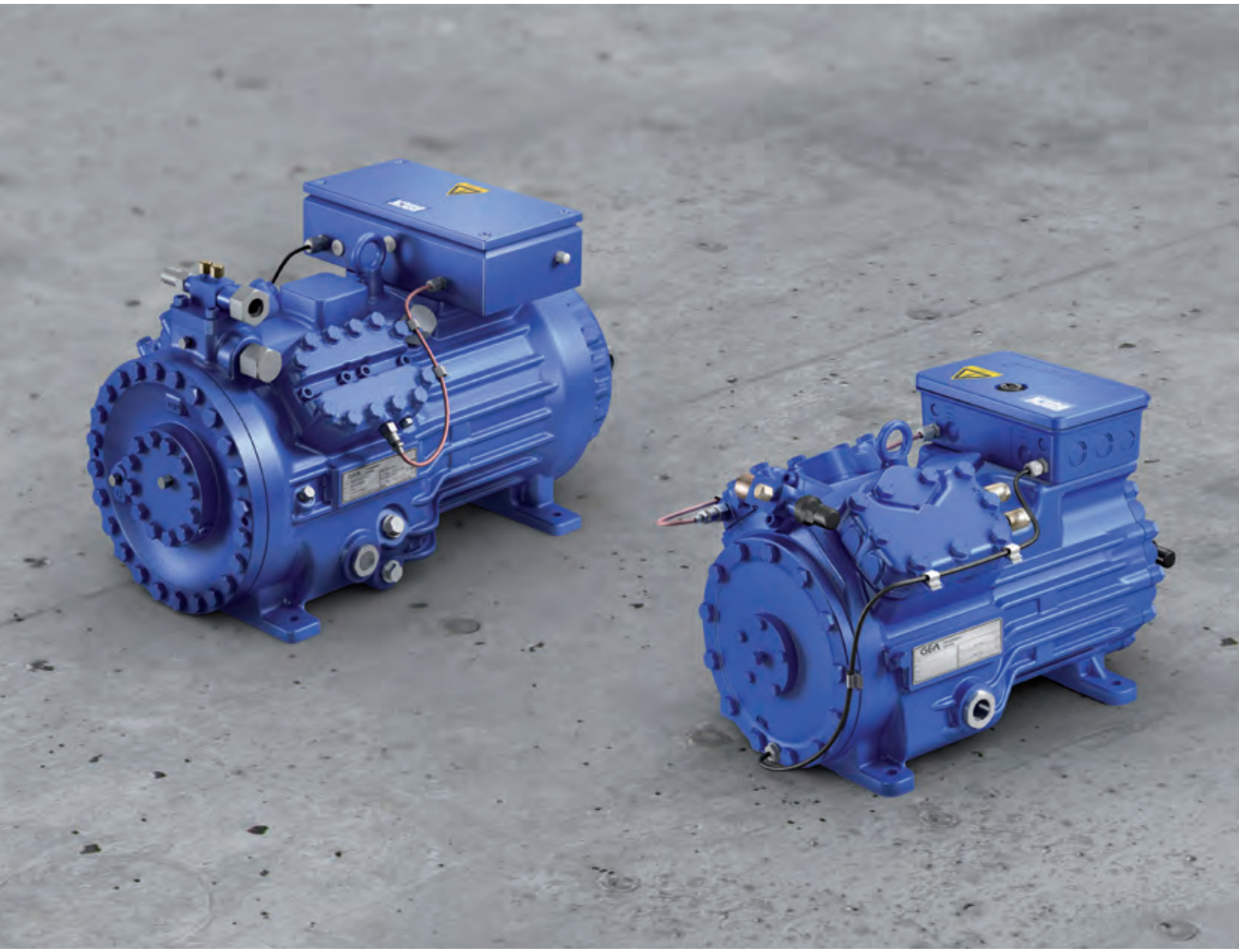

GEA Bock CO_2 Compressors

Semi-hermetic Compressors for the Refrigerant R744

engineering for a better world

GEA Refrigeration Technologies

Semi-hermetic compressors HG (HA)

The GEA Bock HG (Hermetic Gas-cooled) range of semi-hermetic compressors offers traditional suction gas-cooled compressor state of the art technology. These compressors of the highest quality standard excel in their running comfort, easy maintenance, efficiency and reliability. Suitable as standard for conventional or chlorine-free HFC refrigerants.
The HA (Hermetic Air-cooled) range, specially engineered by GEA Bock, is available for deep-freezing applications, in particular for use with the refrigerants R22 and R404A.

- Single-stage
- CO2 compressors subcritical
- CO2 compressors transcritical
- R134a compressors
- R407C compressors
- ATEX compressors
- HC compressors
- Aluminium compressors
- 2-pole compressors
- Two-stage compressors
- Duplex compressors
- Compressor units with receiver
- Condenser units air-cooled

Vehicle compressors FK

Bock vehicle compressors of the FK range are the result of many years of experience in the domain of mobile cooling systems.
The unsurpassed light, compact, robust design and wide r.p.m. range are only some of the outstanding features of this unique product range of two, four and six cylinder compressors.
A wide variety of designs can be tailored to suit individual requirements.
The so-called K version is a special innovation with a unique valve plate system for maximum requirements in bus and coach air-conditioning systems.

- Compressors for bus and train air-conditioning
- Compressors for transport refrigeration and other applications

Open type compressors F

The F model series provides modern open type compressors for separate drive systems (using V belts or direct couplings). Load transfer through a V pair.
Virtually all drive capacity requirements can be met.
Very compact compressor design, robust and easy to handle. Oil pump lubrication as standard.

- F compressors
- F NH3 compressors
- Compressor units for direct drive
- NH3 Compressor units for direct drive

96219-05.2013-Gb Subject to change without notice

CO_2 system examples

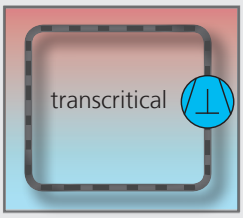

Single-stage applications

Single-stage transcritical CO_2 applications are used in the field of medium temperature refrigeration. They can be operated very efficiently, if the high pressure is operated in the subcritical range over a long period. Using the high-pressure side, it is appropriate to use the application in the transcritical range also in combination with refrigeration, due to a big temperature glide and a relatively high discharge end temperature for specific heat pumps and the heat recovery.
Transcritical Bock CO_2 compressors are used.

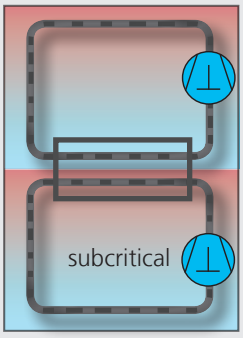

Cascade application

In a cascade system, different refrigerants are used in an application. They are combined in two refrigerating circuits that are separated from each other. A solution with CO_2 in low temperature refrigeration is very interesting due to economic reasons and the perspective of efficiency. The high temperature stage is used as a condenser in the CO_2 application. Here it is possible to use different refrigerants like hydrocarbons, ammonia and also HFCs like R134a.
Subcritical Bock CO_2 compressors are used in the low temperature stage.

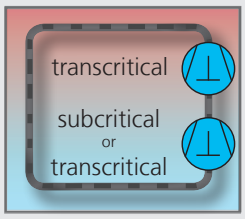

Booster applications

Regarding applications with CO_2 in low and medium temperature refrigeration, so-called Booster systems are used. High pressure of low temperature compressor is discharged directly to the suction side of the second compressor stage. Different plant constructions of these Booster applications are used for example in supermarket applications.
Transcritical and subcritical Bock CO_2 compressors are used.

Oil

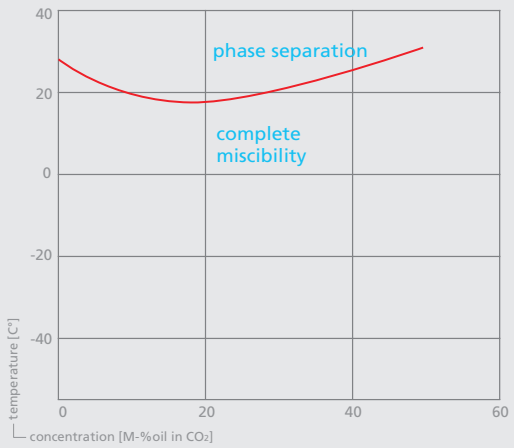

The compressors are equipped with Bock C85E, a special oil filling, which is available directly from GEA Bock. This is a synthetic ester oil with high thermal load resistance, allowing good mixing solubility with CO_2. It possesses a special additive, which protects the compressors against wear, even when subjected to extreme loads, such as those which exist in CO_2 systems. This oil can be used both in transcritical and subcritical systems.


GEA
Connection for
oil level regulator

Bock CO_2 compressors subcritical

CO_2 Compressors (subcritical)

The refrigerant R744

Our solutions are customer-oriented and user-friendly, because they are low-priced, energy-efficient, long-lasting and tailored to your individual needs.

Based on our current semi-hermetic product range, with its outstanding advantages and features, as well as our established basic range of CO_2 compressors, an optimized, downward extended capacity stage is now available for subcritical CO_2 applications.
Especially suited to supermarket refrigeration applications and industrial refrigeration.
Max. permissible operating pressure up to 55 bar at the high pressure side and 40 bar at the low pressure side.

Special features

As Bock compressors are of extremely high quality and robust, the coordination with CO_2 is limited primarily to the motor design together with the individual mechanism adjustments as well as small modifications in the valve and seal areas.
This permits the greatest possible level of operational safety through the extensive use of tried-and-trusted standard parts. In addition, there are the best possible conditions for economic spare part storage.

The refrigerant CO_2

Within refrigeration technology, carbon dioxide (CO_2) is known by the name R744 and has a long history.
It is a colourless gas which liquefies under pressure and has a slightly acidic smell and taste. Carbon dioxide has no ozone depletion potential (ODP = 0) and a negligible direct effect on global warming (GWP = 1) when used as a refrigerant in closed systems.
It is not combustible, is chemically inactive and heavier than air. Carbon dioxide has a narcotic and asphyxiating effect on humans only at higher concentrations.
Carbon dioxide is available naturally in large quantities.

96219-05.2013-Gb Subject to change without notice

The current program

...4 model sizes with 16 capacity stages from 1,6 to 48,2 m³/h (50 Hz)

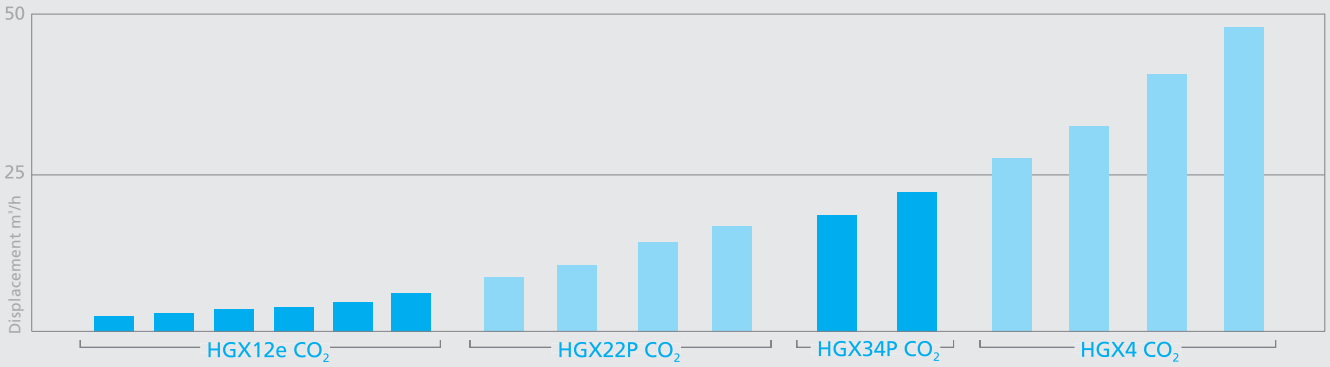

Type key

HGX34P/215-4SCO_2

- CO_2 Version [5]
- Motor variant [4]
- Number of poles
- Swept volume
- Series [3]
- Number of cylinders
- Size
- Ester oil filling [2]
- Series [1]

[1] HG = Compressor Hermetic Gas-cooled (suction gas-cooled)

[2] X = Special Ester oil for CO_2

[3] e = Additional declaration for e-series compressors
P = Additional declaration for Pluscom compressors

[4] S = More powerful motor

[5] CO_2 design for subcritical applications

e-Series

With technical optimizations we continuously improve the energy consumption of our compressors. The compressors of the e-series set a new standard when it comes to motor-efficiency, gas flow and efficiency of the valve system. All this results in a higher refrigerating capacity of the compressor at a lower drive power. In addition, the limits of applications were extended to a condensing temperature of 15°C and an evaporation temperature of -15°C.

At a glance

Wear-resistant durable driving gear

- Solid construction and design
- Low friction sleeve bearings
- Aluminium piston with two ring assembly

Valve plate construction for safe operation

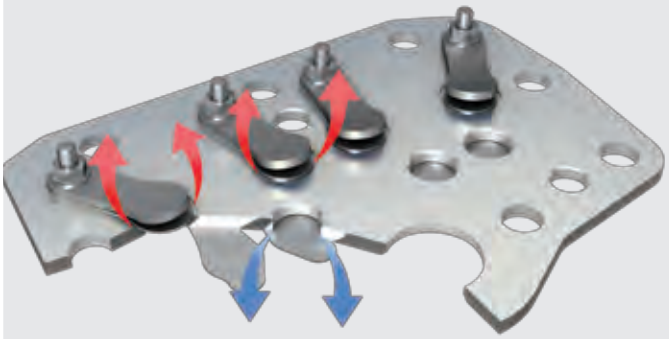

- Valve design, tried and trusted all over the world, with onesided fixed finger reed valves, suction and pressure side
- Valve made out of high quality, impact resistant spring steel

Quiet with low vibrations

- Large dimensioned crankshaft area
- Dynamic mass balance
- High volume pressure area to dampen pulsations
- 4 cylinder construction from 19 m³/h

96219-05.2013-Gb Subject to change without notice

Reliable and safe oil supply

- Classic lubricant circuit with an oil pump independent of the rotating direction
- High volume oil sump
- Special oil charge for CO_2: Bock C85E, directly available from GEA Bock

Oil sump heater (accessories)

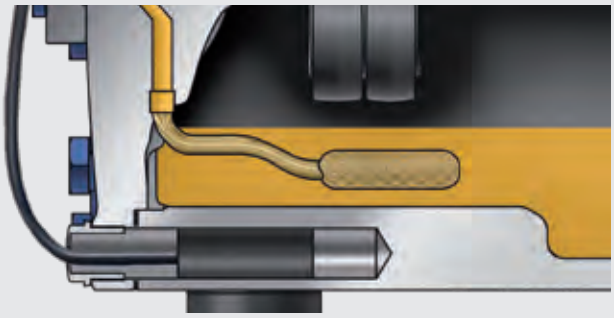

- for HGX12e, HGX22P and HGX34P
- PTC heater, self-regulating version, installation in housing bore
- Replacement possible without opening the refrigerating circuit

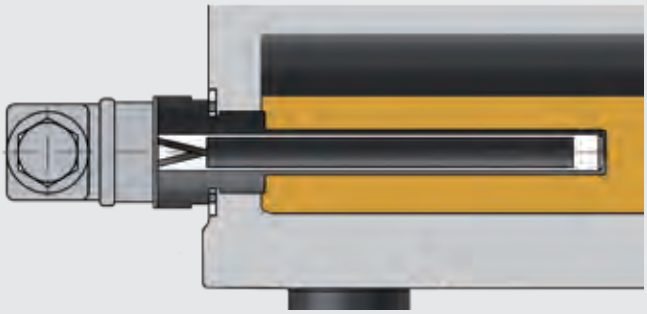

- for HGX4
- Design with immersion sleeve
- Replacement possible without opening the refrigerating circuit

Thermal protection thermostat (accessories)

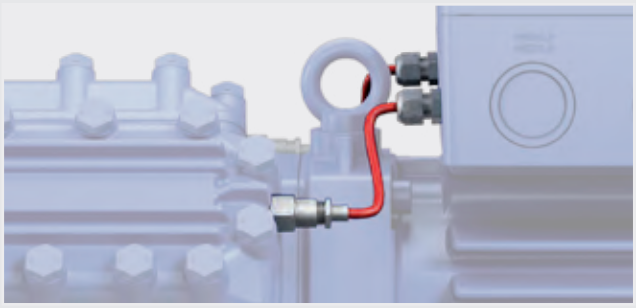

Pressure gas temperature monitoring, PTC sensor direct connection to the Bock MP10 motor protection

Economic capacity control (accessories)

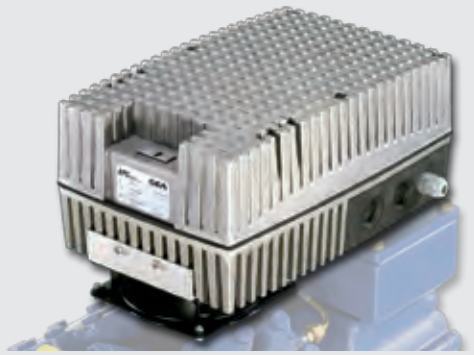

Continuously variable speed control using Bock EFC
(Electronic Frequency Control)
optional for HGX12e, HGX22P, HGX34P

- compact installation on compressor and connected ready for use
- up to 25% lower energy consumption
- Further information is available online at www.bock.de.

Bock MP10 electronic motor protection (series)

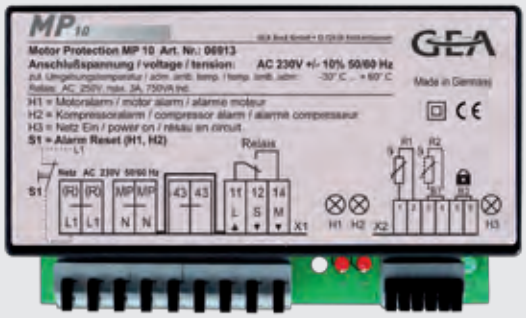

- Temperature monitoring with PTC sensors and optical status indication
- Discharge gas temperature sensor (option)
- Further information is available online at www.bock.de.

Start unloader using Bock ESS (accessories)

Electronic Soft Start

- Optional for HGX22P and HGX34P
- Soft compressor start from zero to nominal speed, time controlled and monitored
- No standard unloaded start required
- IP20 unit for control cabinet installation (included loose)
- Further information is available online at www.bock.de.

CO_2 Operating limits

HGX22P CO_2, HGX34P CO_2, HGX4/310-4 CO_2

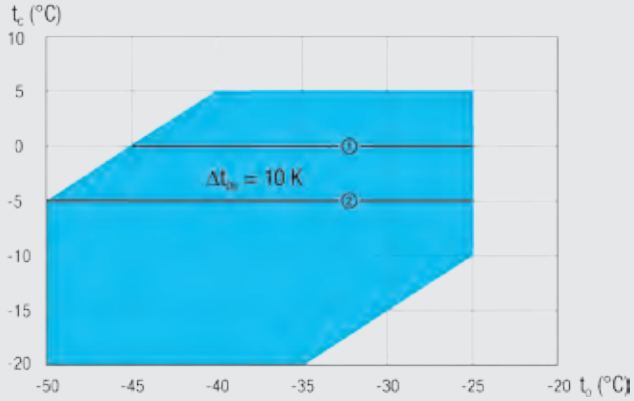

① **HGX4/385-4 CO_2, HGX4/465-4 CO_2**
Max. condensing temperature
t_c = 0 °C

② **HGX4/555-4 CO_2**
Max. condensing temperature
t_c = -5 °C

HGX12e CO_2

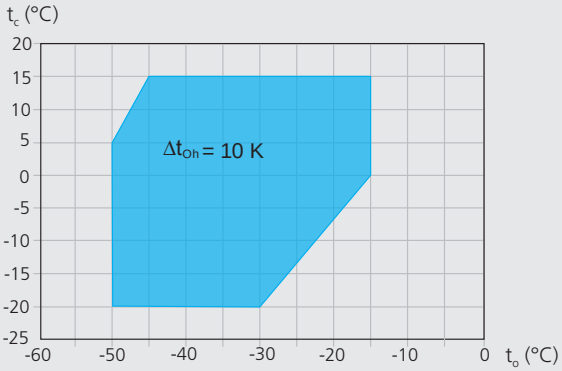

Unlimited application range

t_o Evaporating temperature (°C)
t_c Condensing temperature (°C)
Δt_{Oh} Suction gas superheat (K)

Max. permissible operating pressure (LP/HP)[1]
for HGX12, HGX22 and HGX34: 40/55 bar

Max. permissible operating pressure (LP/HP)[1]
for HGX4: 27/55 bar

[1] LP = low pressure HP = high pressure

CO_2 Notes

Operating limits

Compressor operation is possible within the limits shown on the application diagrams. Please note the coloured areas. Compressor application limits should not be chosen for design purposes or continuous operation.

Restrictions to the operating limits may occur when using the Bock EFC (Electronic Frequency Control). Further information is available online at www.bock.de.

Performance data

The performance data for CO_2 are based on 10 K suction gas superheat without liquid subcooling, at **50 Hz power supply frequency.** These are preliminary values as no uniform reference data are available. Besides which the influence of the oil part on refrigeration performance is largely unknown. **Variations cannot be excluded.** Conversion factor for 60 Hz = 1,2

Performance data for other operating points, see GEA Bock software

CO_2			Performance data							50 Hz
Type	Cond. temp. °C		Cooling capacity $\dot{Q}_o$ [W]					Power consumption P_e [kW]		
			Evaporating temperature °C							
			-15	-20	-25	-30	-35	-40	-45	-50
HGX12e/20-4 S CO_2	-20	Q				4320	3510	2810	2200	1670
		P				0,37	0,44	0,49	0,50	0,49
	-15	Q				4010	3250	2570	1990	1480
		P				0,49	0,54	0,57	0,56	0,52
	-10	Q			4530	3710	2980	2340	1780	1290
		P			0,54	0,60	0,64	0,64	0,61	0,55
	-5	Q		5070	4190	3400	2710	2100	1570	1110
		P		0,59	0,67	0,71	0,72	0,70	0,65	0,58
	0	Q	5610	4680	3840	3100	2450	1870	1370	929
		P	0,65	0,74	0,79	0,81	0,80	0,76	0,69	0,60
	5	Q	5170	4290	3500	2800	2190	1650	1180	759
		P	0,82	0,88	0,91	0,91	0,88	0,82	0,73	0,62
	10	Q	4730	3900	3160	2510	1940	1430	983	
		P	0,98	1,02	1,02	1,00	0,95	0,87	0,77	
	15	Q	4290	3510	2830	2220	1690	1220	802	
		P	1,13	1,15	1,14	1,10	1,03	0,93	0,80	
HGX12e/30-4 S CO_2	-20	Q				6870	5550	4390	3400	2560
		P				0,61	0,74	0,82	0,84	0,81
	-15	Q				6390	5120	4020	3080	2270
		P				0,81	0,90	0,94	0,92	0,86
	-10	Q			7280	5900	4700	3650	2750	1980
		P			0,88	0,98	1,03	1,04	0,99	0,90
	-5	Q		8220	6730	5420	4280	3290	2440	1700
		P		0,95	1,07	1,14	1,16	1,13	1,05	0,93
	0	Q	9180	7580	6170	4940	3860	2930	2120	1430
		P	1,03	1,17	1,26	1,29	1,28	1,21	1,10	0,95
	5	Q	8450	6950	5620	4460	3450	2580	1820	1170
		P	1,28	1,39	1,44	1,43	1,38	1,29	1,15	0,97
	10	Q	7730	6320	5080	4000	3050	2240	1530	
		P	1,52	1,59	1,60	1,57	1,49	1,36	1,19	
	15	Q	7020	5700	4540	3530	2660	1900	1250	
		P	1,75	1,78	1,77	1,70	1,59	1,43	1,24	
HGX12e/40-4 S CO_2	-20	Q				9750	7900	6290	4890	3700
		P				0,85	1,02	1,12	1,16	1,12
	-15	Q				9060	7290	5750	4420	3280
		P				1,12	1,25	1,30	1,28	1,20
	-10	Q			10300	8370	6690	5230	3960	2860
		P			1,22	1,37	1,45	1,45	1,39	1,26
	-5	Q		11600	9500	7680	6090	4700	3500	2460
		P		1,34	1,51	1,61	1,64	1,59	1,48	1,31
	0	Q	12900	10700	8720	7000	5500	4190	3050	2070
		P	1,47	1,67	1,79	1,83	1,81	1,72	1,56	1,35
	5	Q	11900	9770	7940	6330	4920	3690	2620	1690
		P	1,83	1,98	2,05	2,04	1,97	1,84	1,64	1,38
	10	Q	10900	8880	7170	5660	4350	3200	2200	
		P	2,18	2,28	2,30	2,25	2,13	1,95	1,71	
	15	Q	9810	8010	6410	5010	3790	2720	1790	
		P	2,53	2,57	2,55	2,45	2,29	2,07	1,78	
HGX12e/50-4 S CO_2	-20	Q				12300	9960	7950	6200	4700
		P				1,03	1,25	1,38	1,42	1,38
	-15	Q				11400	9190	7270	5600	4170
		P				1,38	1,54	1,60	1,58	1,48
	-10	Q			12900	10600	8430	6600	5010	3650
		P			1,52	1,71	1,80	1,80	1,72	1,56
	-5	Q		14500	11900	9650	7670	5940	4440	3140
		P		1,67	1,89	2,01	2,04	1,99	1,85	1,63
	0	Q	16100	13400	11000	8780	6920	5290	3870	2650
		P	1,84	2,09	2,24	2,30	2,27	2,16	1,96	1,69
	5	Q	14800	12200	9930	7930	6180	4650	3320	2170
		P	2,31	2,49	2,58	2,58	2,49	2,32	2,07	1,74
	10	Q	13500	11100	8950	7090	5450	4030	2790	
		P	2,77	2,89	2,92	2,85	2,70	2,48	2,17	
	15	Q	12200	9960	7990	6260	4750	3430	2280	
		P	3,23	3,28	3,25	3,12	2,92	2,63	2,28	

Relating to 10 K suction gas superheat
without liquid subcooling

96219-05.2013-Gb Subject to change without notice

CO_2			Performance data							50 Hz
Type	Cond. temp. °C		Cooling capacity $\dot{Q}_o$ [W]					Power consumption P_e [kW]		
			Evaporating temperature °C							
			-15	-20	-25	-30	-35	-40	-45	-50
HGX12e/60-4 S CO_2	-20	Q				14700	12000	9560	7540	5810
		P				1,28	1,49	1,62	1,67	1,65
	-15	Q				13700	11100	8800	6880	5240
		P				1,65	1,82	1,89	1,89	1,83
	-10	Q			15400	12600	10200	8060	6240	4680
		P			1,81	2,02	2,13	2,15	2,10	1,99
	-5	Q		17300	14300	11600	9310	7330	5620	4150
		P		1,96	2,23	2,38	2,44	2,40	2,29	2,13
	0	Q	19100	15900	13100	10700	8480	6620	5020	3640
		P	2,11	2,45	2,65	2,74	2,73	2,63	2,46	2,24
	5	Q	17600	14600	12000	9660	7660	5930	4430	3150
		P	2,66	2,93	3,07	3,09	3,01	2,85	2,62	2,33
	10	Q	16100	13300	10900	8720	6870	5260	3870	
		P	3,22	3,42	3,48	3,43	3,29	3,05	2,75	
	15	Q	14600	12100	9760	7800	6090	4610	3340	
		P	3,78	3,90	3,89	3,77	3,55	3,24	2,87	
HGX12e/75-4 S CO_2	-20	Q				17300	14200	11400	9020	6990
		P				1,48	1,72	1,87	1,92	1,91
	-15	Q				16100	13100	10500	8230	6300
		P				1,92	2,11	2,19	2,19	2,13
	-10	Q			18100	14900	12100	9600	7470	5630
		P			2,11	2,36	2,49	2,51	2,45	2,32
	-5	Q		20200	16800	13700	11100	8730	6720	4990
		P		2,30	2,62	2,80	2,86	2,81	2,69	2,49
	0	Q	22300	18600	15400	12600	10100	7880	6000	4370
		P	2,49	2,88	3,13	3,23	3,22	3,10	2,91	2,64
	5	Q	20500	17100	14100	11500	9090	7060	5300	3780
		P	3,16	3,47	3,64	3,67	3,57	3,38	3,10	2,76
	10	Q	18800	15600	12800	10300	8140	6270	4640	
		P	3,84	4,07	4,15	4,09	3,92	3,64	3,28	
	15	Q	17000	14100	11500	9200	7220	5500	3990	
		P	4,53	4,68	4,66	4,52	4,25	3,89	3,44	

Relating to 10 K suction gas superheat
without liquid subcooling

CO_2			Performance data					50 Hz
Type	Cond. temp. °C		Cooling capacity $\dot{Q}_o$ [W]			Power consumption P_e [kW]		
			Evaporating temperature °C					
			-25	-30	-35	-40	-45	-50
HGX22P/110-4 CO_2	-20	Q			21500	17600	14100	11200
		P			2,57	2,72	2,76	2,69
	-15	Q		24400	20200	16400	13100	10300
		P		2,97	3,16	3,23	3,20	3,06
	-10	Q	27400	22900	18800	15200	12100	9370
		P	3,40	3,61	3,72	3,72	3,61	3,39
	-5	Q	25600	21300	17400	14000	11100	8540
		P	4,10	4,23	4,25	4,17	3,97	3,68
	0	Q	23800	19700	16000	12800	10100	
		P	4,76	4,81	4,74	4,58	4,30	
	5	Q	22000	18100	14700	11700		
		P	5,40	5,35	5,20	4,95		
HGX22P/125-4 CO_2	-20	Q			25400	20700	16700	13200
		P			3,05	3,22	3,28	3,22
	-15	Q		28800	23800	19300	15400	12100
		P		3,48	3,68	3,75	3,72	3,56
	-10	Q	32300	26900	22100	17900	14200	11100
		P	4,00	4,21	4,31	4,29	4,16	3,92
	-5	Q	30100	25000	20500	16500	13000	10100
		P	4,83	4,95	4,95	4,84	4,61	4,27
	0	Q	28000	23200	18900	15100	11900	
		P	5,65	5,67	5,57	5,37	5,05	
	5	Q	25800	21300	17300	13800		
		P	6,44	6,37	6,18	5,89		
HGX22P/160-4 CO_2	-20	Q			31200	25500	20500	16300
		P			3,77	3,99	4,05	3,95
	-15	Q		35400	29200	23800	19000	15000
		P		4,32	4,58	4,68	4,62	4,40
	-10	Q	39700	33100	27200	22000	17500	13700
		P	4,95	5,23	5,37	5,35	5,17	4,85
	-5	Q	37000	30800	25200	20300	16100	12500
		P	5,96	6,12	6,13	6,00	5,71	5,28
	0	Q	34400	28500	23200	18600	14700	
		P	6,94	6,98	6,87	6,63	6,24	
	5	Q	31700	26200	21300	17000		
		P	7,89	7,81	7,60	7,24		
HGX22P/190-4 CO_2	-20	Q			37500	30700	24700	19600
		P			4,57	4,82	4,89	4,78
	-15	Q		42500	35100	28600	22900	18100
		P		5,18	5,49	5,62	5,57	5,33
	-10	Q	47800	39700	32700	26500	21100	16500
		P	5,90	6,25	6,42	6,41	6,23	5,86
	-5	Q	44500	36900	30300	24400	19400	15000
		P	7,12	7,31	7,34	7,20	6,88	6,39
	0	Q	41300	34100	27900	22400	17700	
		P	8,34	8,39	8,27	7,98	7,53	
	5	Q	38100	31400	25500	20400		
		P	9,58	9,47	9,20	8,77		

Relating to 10 K suction gas superheat
without liquid subcooling

96219-05.2013-Gb Subject to change without notice

Performance data

CO_2			Performance data					50 Hz
Type	Cond. temp. °C		Cooling capacity $\dot{Q}_o$ [W]			Power consumption P_e [kW]		
			Evaporating temperature °C					
			-25	-30	-35	-40	-45	-50
HGX34P/215-4 CO_2	-20	Q			42200	34200	27300	21300
		P			4,75	5,18	5,33	5,21
	-15	Q		47600	39100	31500	25000	19400
		P		5,39	5,90	6,15	6,13	5,85
	-10	Q	53300	44100	36000	29000	22900	17600
		P	6,12	6,69	7,01	7,07	6,88	6,43
	-5	Q	49300	40700	33100	26500	20800	15900
		P	7,61	7,96	8,08	7,95	7,58	6,97
	0	Q	45500	37400	30400	24200	18900	
		P	9,07	9,22	9,13	8,81	8,27	
	5	Q	41700	34200	27700	22000		
		P	10,50	10,40	10,10	9,67		
HGX34P/255-4 CO_2	-20	Q			49400	40100	32100	25100
		P			5,49	5,97	6,17	6,08
	-15	Q		55800	45800	37000	29400	22900
		P		6,37	6,91	7,18	7,17	6,89
	-10	Q	62500	51700	42300	34000	26900	20700
		P	7,36	7,94	8,26	8,31	8,09	7,61
	-5	Q	57800	47700	38900	31200	24400	18700
		P	9,09	9,43	9,52	9,35	8,93	8,25
	0	Q	53300	43800	35600	28400	22100	
		P	10,70	10,80	10,70	10,30	9,68	
	5	Q	48900	40100	32400	25700		
		P	12,30	12,10	11,70	11,10		

Relating to 10 K suction gas superheat
without liquid subcooling

CO_2	Performance data							50 Hz
Type	Cond. temp. °C		Cooling capacity $\dot{Q}_o$ [W]			Power consumption P_e [kW]		
			Evaporating temperature °C					
			-25	-30	-35	-40	-45	-50
HGX4/310-4 CO_2	-20	Q			58400	47900	38700	30800
		P			8,12	8,15	8,01	7,70
	-15	Q		66300	54800	44700	35800	28300
		P		9,30	9,36	9,25	8,99	8,57
	-10	Q	74500	62200	51100	41400	32900	25700
		P	10,60	10,70	10,60	10,40	10,00	9,49
	-5	Q	69700	57800	47200	37900	29900	23100
		P	12,30	12,20	12,00	11,60	11,10	10,40
	0	Q	64600	53300	43200	34400	26800	
		P	14,10	13,80	13,50	13,00	12,30	
	5	Q	59300	48600	39100	30800		
		P	16,00	15,60	15,10	14,50		
HGX4/385-4 CO_2	-20	Q			72600	59400	47900	38000
		P			10,00	10,00	9,92	9,55
	-15	Q		82200	67900	55200	44200	34800
		P		11,40	11,50	11,40	11,00	10,50
	-10	Q	92000	76800	63100	51000	40500	31700
		P	13,30	13,40	13,20	12,90	12,40	11,80
	-5	Q	85700	71200	58200	46800	36900	28600
		P	15,30	15,20	14,90	14,40	13,80	12,90
	0	Q	79300	65500	53300	42500	33300	
		P	16,90	16,60	16,10	15,50	14,70	
	5	Q						
		P						
HGX4/465-4 CO_2	-20	Q			87600	71700	57800	46000
		P			12,00	12,00	11,90	11,60
	-15	Q		99100	81900	66700	53400	42100
		P		13,80	13,90	13,80	13,40	12,90
	-10	Q	111000	92500	76100	61600	49000	38300
		P	15,90	16,10	16,00	15,60	15,10	14,20
	-5	Q	104000	85800	70200	56400	44600	34600
		P	18,40	18,40	18,10	17,60	16,70	15,60
	0	Q	95500	78900	64200	51300	40200	
		P	21,00	20,80	20,30	19,50	18,30	
	5	Q						
		P						
HGX4/555-4 CO_2	-20	Q			105000	85700	69000	54500
		P			14,40	14,40	14,20	13,70
	-15	Q		119000	97700	79500	63600	50000
		P		16,50	16,60	16,40	15,90	15,20
	-10	Q	133000	111000	90600	73400	58500	45600
		P	19,10	19,20	19,10	18,60	17,90	16,90
	-5	Q	124000	103000	83600	67400	53400	41300
		P	22,00	21,90	21,50	20,80	19,90	18,70
	0	Q						
		P						
	5	Q						
		P						

Relating to 10 K suction gas superheat
without liquid subcooling

CO_2 Type	Number of cylinders	Displacement 50 / 60 Hz (1450 / 1740 rpm)	Electrical data: Voltage ①	Electrical data: Max. working current ②	Electrical data: Max. power consumption ②	Electrical data: Starting current (rotor locked) ②	Weight	Connections ⑤: Discharge line DV	Connections ⑤: Suction line SV	Oil charge
		m³/h		A	kW	A	kg	mm I inch	mm I inch	Ltr.
				Δ / Y		Δ / Y				
HGX12e/20-4 S CO_2	2	1,6 / 1,9	③	4,0 / 2,3	1,2	24 / 14	49	12 I 1/2	16 I 5/8	0,8
HGX12e/30-4 S CO_2	2	2,6 / 3,1	③	6,0 / 3,5	1,8	40 / 23	49	12 I 1/2	16 I 5/8	0,8
HGX12e/40-4 S CO_2	2	3,6 / 4,3	③	8,3 / 4,8	2,6	40 / 23	53	12 I 1/2	16 I 5/8	0,8
HGX12e/50-4 S CO_2	2	4,5 / 5,4	③	9,7 / 5,6	3,3	43 / 25	53	12 I 1/2	16 I 5/8	0,8
HGX12e/60-4 S CO_2	2	5,4 / 6,5	③	13,3 / 7,7	3,9	69 / 40	49	12 I 1/2	16 I 5/8	0,8
HGX12e/75-4 S CO_2	2	6,4 / 7,7	③	15,7 / 9,0	4,7	69 / 40	49	12 I 1/2	16 I 5/8	0,8
HGX22P/110-4 CO_2	2	9,4 / 11,3	③	16,1 / 9,3	5,4	121 / 70	83	16 I 5/8	22 I 7/8	1,0
HGX22P/125-4 CO_2	2	11,1 / 13,3	③	18,6 / 10,7	6,4	121 / 70	78	16 I 5/8	22 I 7/8	1,0
HGX22P/160-4 CO_2	2	13,7 / 16,4	③	22,4 / 13,0	7,9	121 / 70	82	16 I 5/8	22 I 7/8	1,0
HGX22P/190-4 CO_2	2	16,5 / 19,8	③	27,4 / 15,8	9,6	134 / 77	84	16 I 5/8	22 I 7/8	1,0
HGX34P/215-4 CO_2	4	18,8 / 22,6	③	29,7 / 17,2	10,5	134 / 77	98	16 I 5/8	22 I 7/8	1,3
HGX34P/255-4 CO_2	4	22,1 / 26,6	③	34,3 / 19,8	12,3	134 / 77	98	16 I 5/8	28 I 1 1/8	1,3
				* PW 1+2		*PW1 / PW 1+2				
HGX4/310-4 CO_2	4	27,1 / 32,5	④	27,2	16,0	82 / 107	152	22 I 7/8	28 I 1 1/8	2,7
HGX4/385-4 CO_2	4	33,5 / 40,2	④	28,7	16,9	82 / 107	151	22 I 7/8	28 I 1 1/8	2,7
HGX4/465-4 CO_2	4	40,5 / 48,6	④	36,5	21,0	107 / 140	154	28 I 1 1/8	35 I 1 3/8	2,7
HGX4/555-4 CO_2	4	48,2 / 57,8	④	38,2	22,0	107 / 140	157	28 I 1 1/8	35 I 1 3/8	2,7

* PW = Part Winding, motors for part winding start 1 = 1. part winding 2 = 2. part winding

Explanations:

① Tolerance (± 10%) relates to the mean value of the voltage range. Other voltages and current types on request.

② - The specifications for max. power consumption apply for 50 Hz operation. For 60 Hz operation, the specifications have to be multiplied by the factor 1.2.
The max. working current remains unchanged.
- Take account of the max. operating current / max. power consumption when designing contactors, leads and fuses.
Switches: service category AC3

③ 220-240 V Δ / 380-420 V Y - 3 - 50 Hz
265-290 V Δ / 440-480 V Y - 3 - 60 Hz

④ 380-420 V Y/YY - 3 - 50 Hz PW
440-480 V Y/YY - 3 - 60 Hz PW
PW = Part Winding, motors for part winding start
(no start unloaders required)
- Winding ratio: 66% / 33%
- Designs for Y/Δ on request

⑤ For soldering connections

Dimensions and connections

HGX12e CO_2

HGX12e/20-4 S CO_2
HGX12e/30-4 S CO_2

HGX12e/40-4 S CO_2
HGX12e/50-4 S CO_2

HGX12e/60-4 S CO_2
HGX12e/75-4 S CO_2

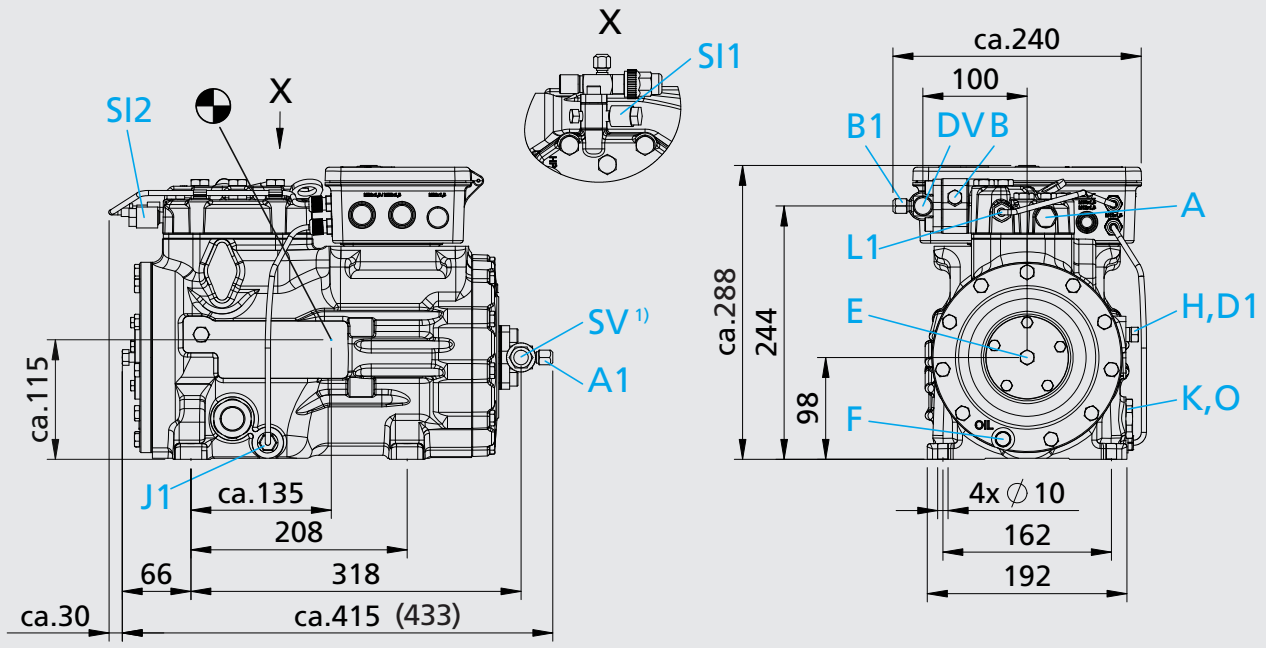

( ) = HGX12e/60-4 S CO_2, HGX12e/75-4 S CO_2

HGX22P CO_2

HGX22P/110-4 CO_2
HGX22P/125-4 CO_2

HGX22P/160-4 CO_2
HGX22P/190-4 CO_2

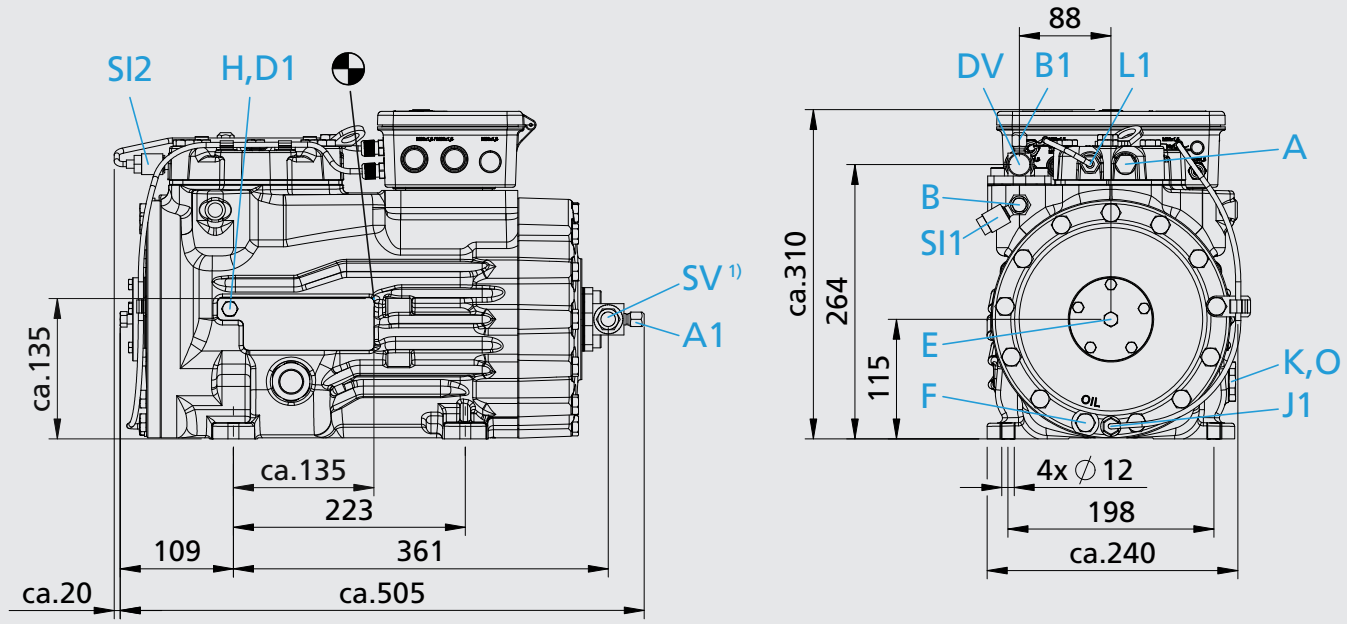

Dimensions in mm
1) SV 90° rotatable
Centre of gravity

- Connections see page 22
- Dimensions for anti-vibration pad see page 20

96219-05.2013-Gb Subject to change without notice

Dimensions and connections

HGX34P CO_2

HGX34P/215-4 CO_2 HGX34P/255-4 CO_2

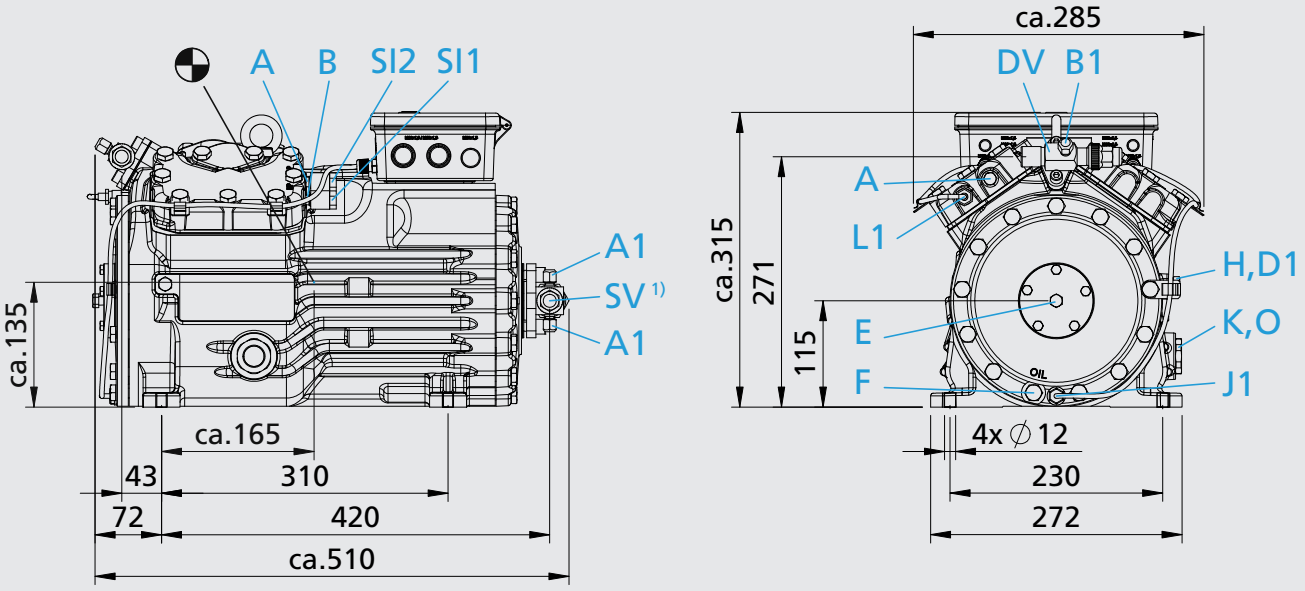

HGX4 CO_2

HGX4/310-4 CO_2
HGX4/385-4 CO_2

HGX4/465-4 CO_2
HGX4/555-4 CO_2

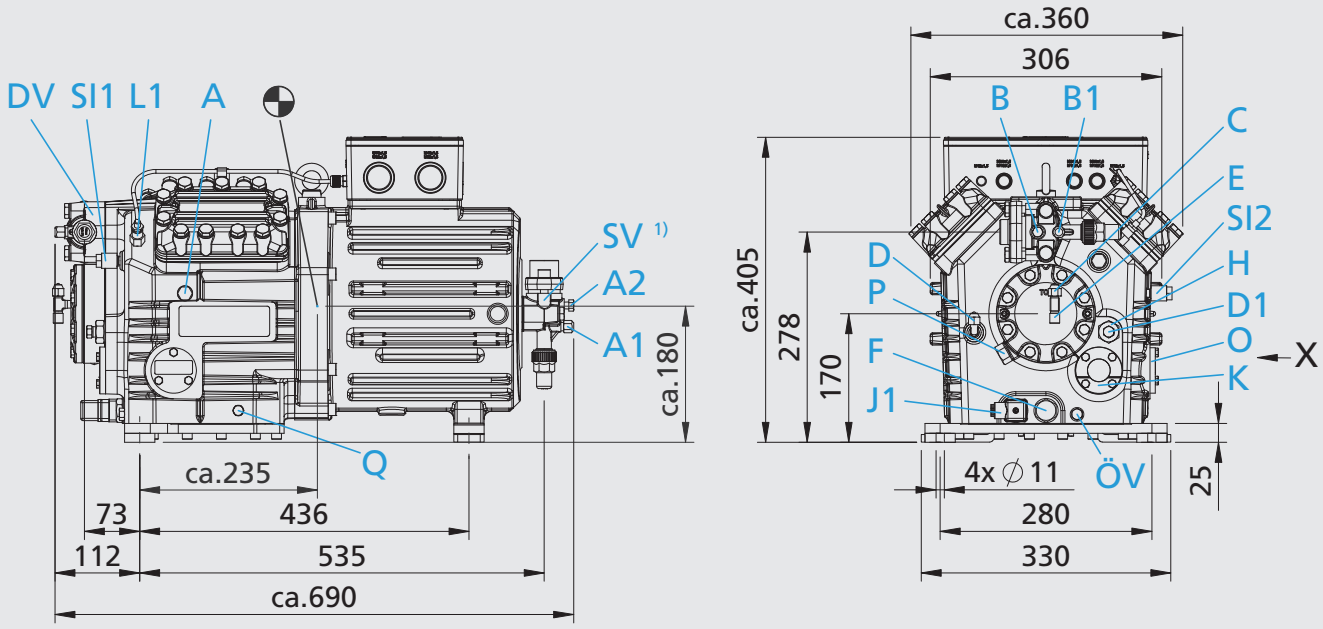

Dimensions in mm
[1] SV 90° rotatable
Centre of gravity

- Connections see page 22
- Dimensions for anti-vibration pad see page 20
- Dimensions for view X see page 21

Dimensions and connections

Dimensions with accessories

HGX12e CO_2 HGX22P CO_2 HGX34P CO_2

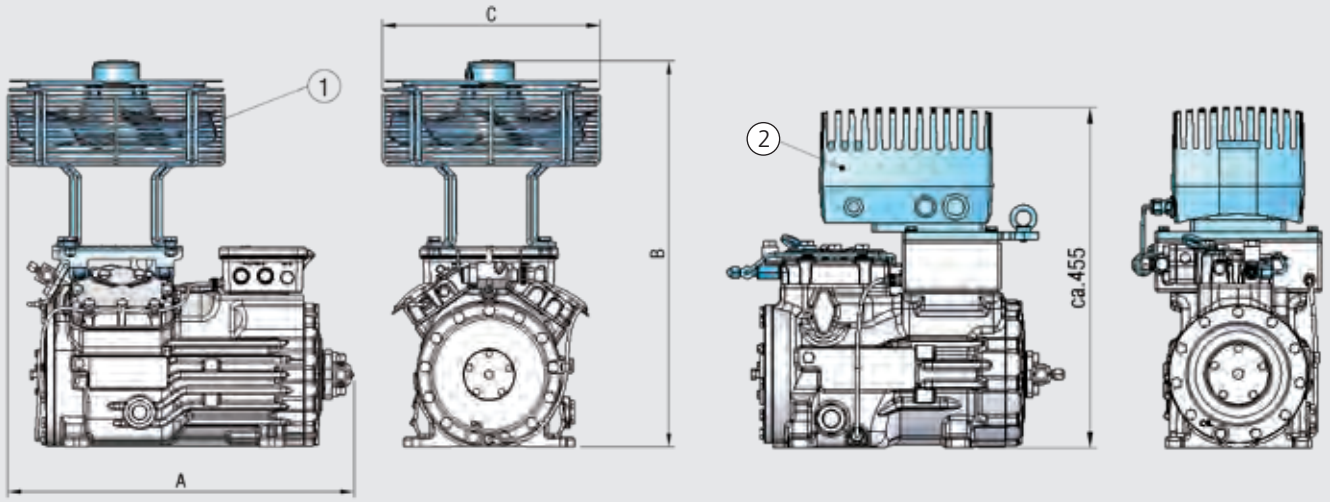

① Additional fan ② EFC Electronic Frequency Control

Type	A mm	B mm	C mm
HGX12e CO_2	ca. 460	ca. 500	ca. 315
HGX22P CO_2	ca. 550	ca. 595	ca. 350
HGX34P CO_2	ca. 550	ca. 620	ca. 350

Dimensions for anti-vibration pad

Type	Ø a mm	b mm	c mm	d mm
HGX12e CO_2	30	30	M8	20
HGX22P CO_2	40	30	M10	20
HGX34P CO_2	40	30	M10	20
HGX4 CO_2	40	30	M10	20

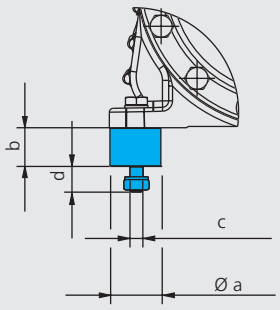

96219-05.2013-Gb Subject to change without notice

Dimensions and connections

Dimensions with accessories

HGX4 CO_2

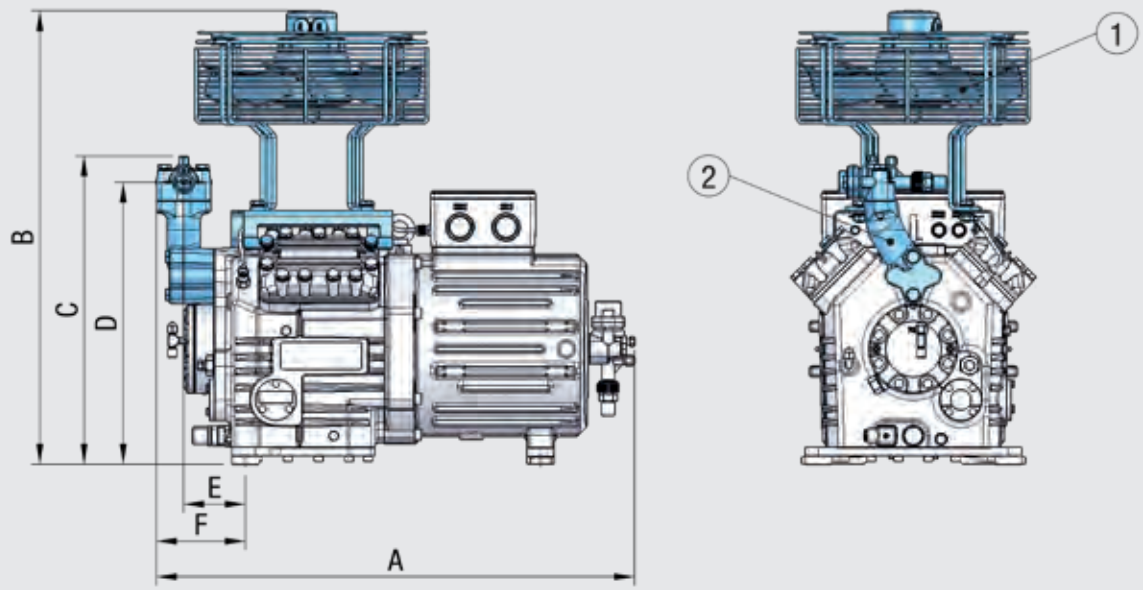

① Additional fan ② Intermediate adapter for discharge line valve

Type	A mm	B mm	C mm	D mm	E mm	F mm
HGX4 CO_2	ca. 705	ca. 680	ca. 455	416	91	131

Ansicht X

Possibility to connect to oil level regulator

HGX4... CO_2

● Three-hole connection for oil level regulator make ESK, AC+R, CARLY (3x M6, 10 deep)

○ Three-hole connection for oil level regulator make TRAXOIL (3 x M6 x 10 deep)

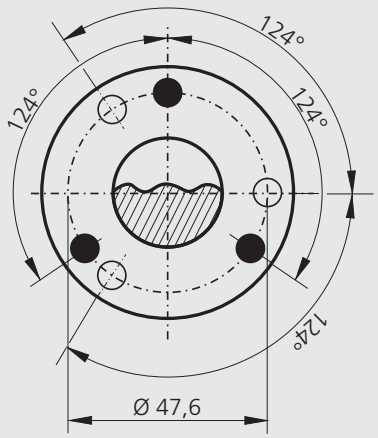

Dimensions in mm

Dimensions and connections

Connections		HGX12e CO_2	HGX22P CO_2	HGX34P CO_2	HGX4 CO_2
SV DV	Suction line Discharge line	please refer to Technical data page 17			
A	Connection suction side, not lockable	$^1/_8$ " NPTF [1)]	$^1/_8$ " NPTF [1)]	$^1/_8$ " NPTF [1)]	$^1/_8$ " NPTF [1)]
A1	Connection suction side, lockable	$^7/_{16}$ " UNF	$^7/_{16}$ " UNF	$^7/_{16}$ " UNF	$^7/_{16}$ " UNF
A2	Connection suction side, not lockable	-	-	$^1/_8$ " NPTF	$^1/_8$ " NPTF
B	Connection discharge side, not lockable	$^1/_8$ " NPTF	$^1/_8$ " NPTF	$^1/_8$ " NPTF [1)]	$^1/_8$ " NPTF
B1	Connection discharge side, lockable	$^7/_{16}$ " UNF	$^7/_{16}$ " UNF	$^7/_{16}$ " UNF	$^7/_{16}$ " UNF
C	Connection oil pressure safety switch OIL	-	-	-	$^7/_{16}$ " UNF
D	Connection oil pressure safety switch LP	-	-	-	$^7/_{16}$ " UNF
D1	Connection oil return from oil separator	$^1/_4$ " NPTF	$^1/_4$ " NPTF	$^1/_4$ " NPTF	$^1/_4$ " NPTF
E	Connection oil pressure gauge	$^1/_8$ " NPTF	$^1/_8$ " NPTF	$^1/_8$ " NPTF	$^1/_8$ " NPTF
F	Oil drain	M 8	M 10	M 10	M 22 x 1,5
H	Oil charge plug	$^1/_4$ " NPTF	$^1/_4$ " NPTF	$^1/_4$ " NPTF	M 22 x 1,5
J1	Oil sump heater (accessories)	Ø 15 mm	Ø 15 mm	Ø 15 mm	M 22 x 1,5
K	Sight glass	$1^1/_8$" - 18 UNEF	$1^1/_8$" - 18 UNEF	$1^1/_8$" - 18 UNEF	4 hole M 6
L1	Thermal protection thermostat (accessories)	$^1/_8$ " NPTF	$^1/_8$ " NPTF	$^1/_8$ " NPTF	$^1/_8$ " NPTF
O	Connection oil level regulator	$1^1/_8$" - 18 UNEF	$1^1/_8$" - 18 UNEF	$1^1/_8$" - 18 UNEF	①
SI1	Decompression valve HP	$^1/_8$ " NPTF	$^1/_8$ " NPTF	$^1/_8$ " NPTF	$^1/_8$ " NPTF
SI2	Decompression valve LP	$^1/_8$ " NPTF	$^1/_8$ " NPTF	$^1/_8$ " NPTF	$^1/_8$ " NPTF
ÖV	Connection oil service valve	-	-	-	$^1/_4$ " NPTF
P	Connection oil differential pressure sensor	-	-	-	M 20 x 1,5
Q	Connection oil temperature sensor	-	-	-	$^1/_8$ " NPTF

① Dimensions see view X

[1)] Only possible with additional adapter.

96219-05.2013-Gb Subject to change without notice

Scope of supply

Scope of supply	HGX12e CO_2	HGX22P CO_2	HGX34P CO_2	HGX4 CO_2
Semi-hermetic two cylinder reciprocating compressor with drive motor for direct start 220-240 V Δ / 380-420 V Y - 3 - 50 Hz 265-290 V Δ / 440-480 V Y - 3 - 60 Hz Single-section compressor housing with hermetically integrated electric motor	●	●		
Semi-hermetic four cylinder reciprocating compressor with drive motor for direct start 220-240 V Δ / 380-420 V Y - 3 - 50 Hz 265-290 V Δ / 440-480 V Y - 3 - 60 Hz Single-section compressor housing with hermetically integrated electric motor			●	
Semi-hermetic four cylinder reciprocating compressor with drive motor for part winding start 380-420 V Y/YY - 3 - 50 Hz 440-480 V Y/YY - 3 - 60 Hz Motor unit flanged onto the compressor housing				●
Winding protection with PTC resistor sensors and electronic motor protection unit Bock MP10	●	●	●	●
Oil pump	●	●	●	●
Oil pump cover with screwed connection for differential oil pressure sensor (Δp-switch Kriwan make)				●
Connection possibility of oil level controllers makes ESK, AC+R or CARLY	● [1]	● [1]	● [1]	●
Connection possibility of oil level controller make Traxoil	● [1]	● [1]	● [1]	● [1]
Oil charge: Bock C85E	●	●	●	●
Sight glass	●	●	●	●
Decompression valve for HP and LP side	●	●	●	●
Suction and discharge line valve	●	●	●	●
Inert gas charge	●	●	●	●
4 anti-vibration pads enclosed	●	●	●	●

[1] Only possible with additional adapter.

ⓘ Oil sump heater is necessary due to the high CO_2 solubility in the oil.

Accessories

Accessories	HGX12e CO_2	HGX22P CO_2	HGX34P CO_2	HGX4 CO_2
① Start unloader by means of a Bock ESS (Electronic Soft Start) IP20 (connection clamps IP00) for installation in switch cabinet		●	●	●
② Continuously variable speed control by means of a Bock EFC (Electronic Frequency Control), compactly built onto compressor and connected ready-to-operate HGX12e: IP65 HGX22P/HGX34P: IP54	●	●	●	
③ Thermal protection thermostat (PTC sensor)	●	●	●	●
④ Oil sump heater 110-240 V - 1 - 50/60 Hz, 50-120 W PTC heater, self regulating	●	●	●	
Oil sump heater 230 V - 1 - 50/60 Hz, 80 W				●
Compressor oil Bock C85E as 1 liter refill unit	●	●	●	●
⑤ Oil differential pressure sensor (Δp-switch Fabrikat make) 220-240 V - 1 - 50/60 Hz				●
⑥ Oil service valve				●
⑦ Bock Compressor Management BCM2000 including oil pressure control, oil temperature control (NTC), thermal protection thermostat (PTC) per cylinder cover (only possible ex works)				●
⑧ Water-cooled cylinder covers				●
See water resistant water-cooled cylinder covers				●
⑨ Additional fan 220-240 V - 1 - 50/60 Hz, 72/68 W, IP44 enclosed	●			
Additional fan 230 V Δ / 400 V Y - 3 - 50 Hz, 120 W, 230-265 V Δ / 400-460 V Y - 3 - 60 Hz, 190 W, IP54 enclosed		● [1]	● [1]	● [1]
⑩ Intermediate adapter for discharge line valve				●
Adapter for decompression valve	●	●	●	●

[1] Voltage range ± 10%
Special voltage and/or frequency (on request)

96219-05.2013-Gb Subject to change without notice

Accessories

ESS Electronic Soft Start

EFC Electronic Frequency Control

Thermal protection thermostat

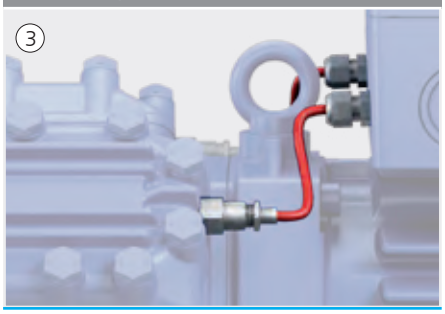

Oil sump heater

Oil differential pressure sensor

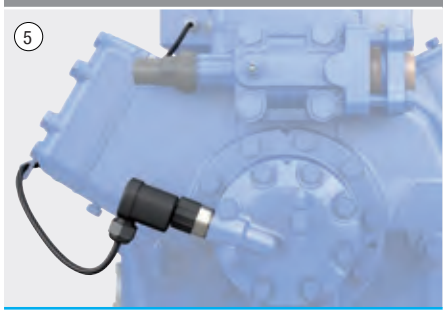

Oil service valve

BCM2000 Bock Compressor Management

Water-cooled cylinder covers

Additional fan

Intermediate adapter for discharge line valve

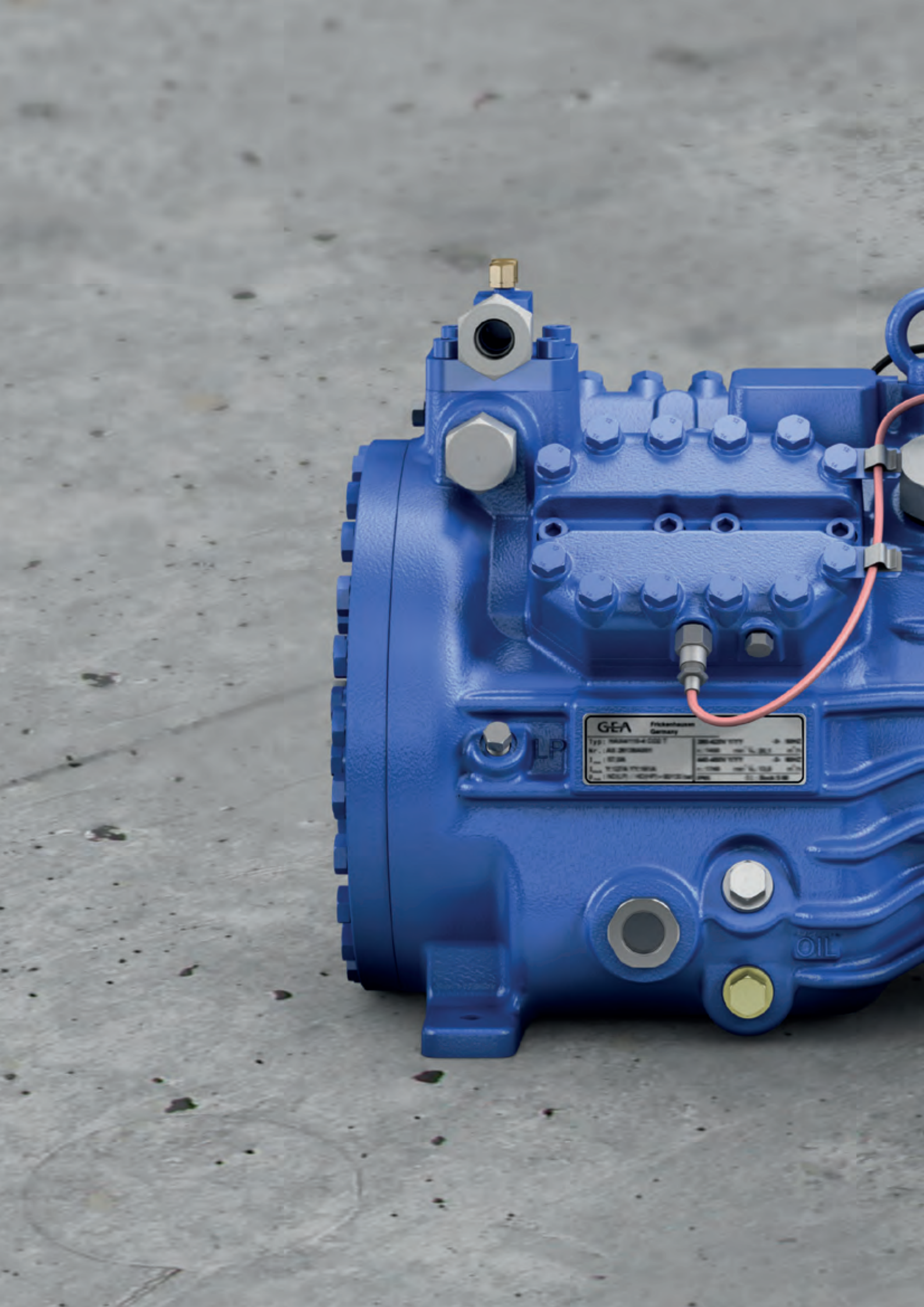
GEA
Frickenhausen
Germany
LP
OIL

Bock CO_2 compressors transcritical

CO_2 Compressors (transcritical)

The refrigerant CO_2

Our solutions are customer-oriented and user-friendly, because they are low-priced, energy-efficient, long-lasting and tailored to your individual needs.

Since the beginning of the 1990's, GEA Bock, together with leading institutes and manufacturers, has concerned itself with the development of compressors for the transcritical CO_2 process. In the past years, CO_2 compressors by GEA Bock could be established in many areas of application.
The current program of transcritical CO_2 compressors was now extended by the 6-cylinder model HGX46 CO_2 T with displacement of 21,8 to 30,2 m³/h. A program from 6,2 to 30,2 m3/h is now available.

The refrigerant CO_2
Within refrigeration technology, carbon dioxide (CO_2) is known by the name R744 and has a long history.
It is a colourless gas which
liquefies under pressure and has a slightly acidic smell and taste.
Carbon dioxide has no ozone depletion potential (ODP=0) and a negligible direct effect on global warming (GWP = 1) when used as a refrigerant in closed systems.
It is not combustible, is chemically inactive and heavier than air. Carbon dioxide has a narcotic and asphyxiating effect on humans only at higher concentrations.
As carbon dioxide is less energy efficient than other refrigerants, recently work has particularly concentrated on optimising plant technology for specific applications. Carbon dioxide is available naturally in large quantities.

96219-05.2013-Gb Subject to change without notice

The current program

...3 model sizes with 14 capacity stages from 6,2 to 30,2 m³/h (50 Hz)

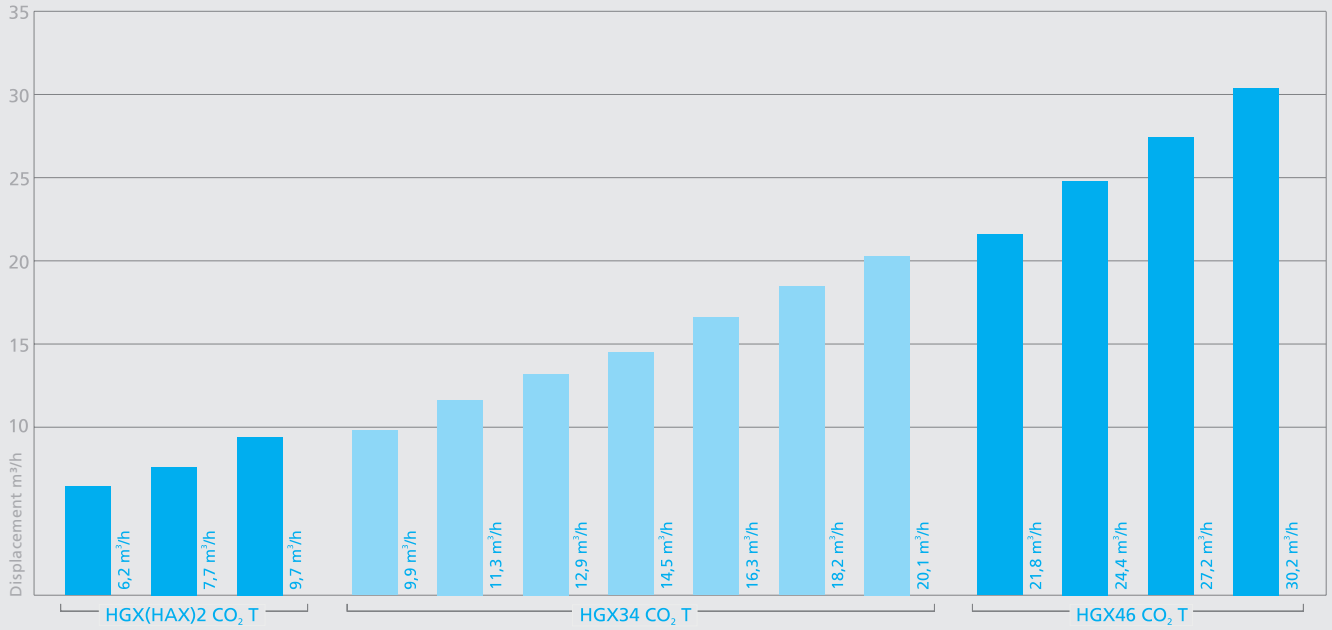

Type key

HGX34/210-4ML CO_2 T

- T — Transcritical
- CO_2 — CO_2 Version
- ML — Compressor variant [3]
- 4 — Number of poles
- 210 — Swept volume
- 4 — Number of cylinders
- 34 — Size
- X — Ester oi-filling[2]
- HG — Series [1]

[1] HG = Hermetic Gas-cooled (suction gas-cooled)

[2] X = Spezial ester oil for CO_2

[3] ML = Normal cooling and deep freezing at low and medium evaporation temperatures

S = For frequency regulation and extended limits of application

SH = For heat pumps and at high evaporating temperatures, different oil charge

Important information

- Transcritical CO_2 applications are still in the development phase
- They require a completely new kind of system and control
- They are not a general solution for the substitution of F-gases
- We specifically point out that all information in this brochure has been made based on our current level of knowledge and may change due to further development. Legal claims regarding the accuracy of the information cannot be made at any time and are hereby excluded.

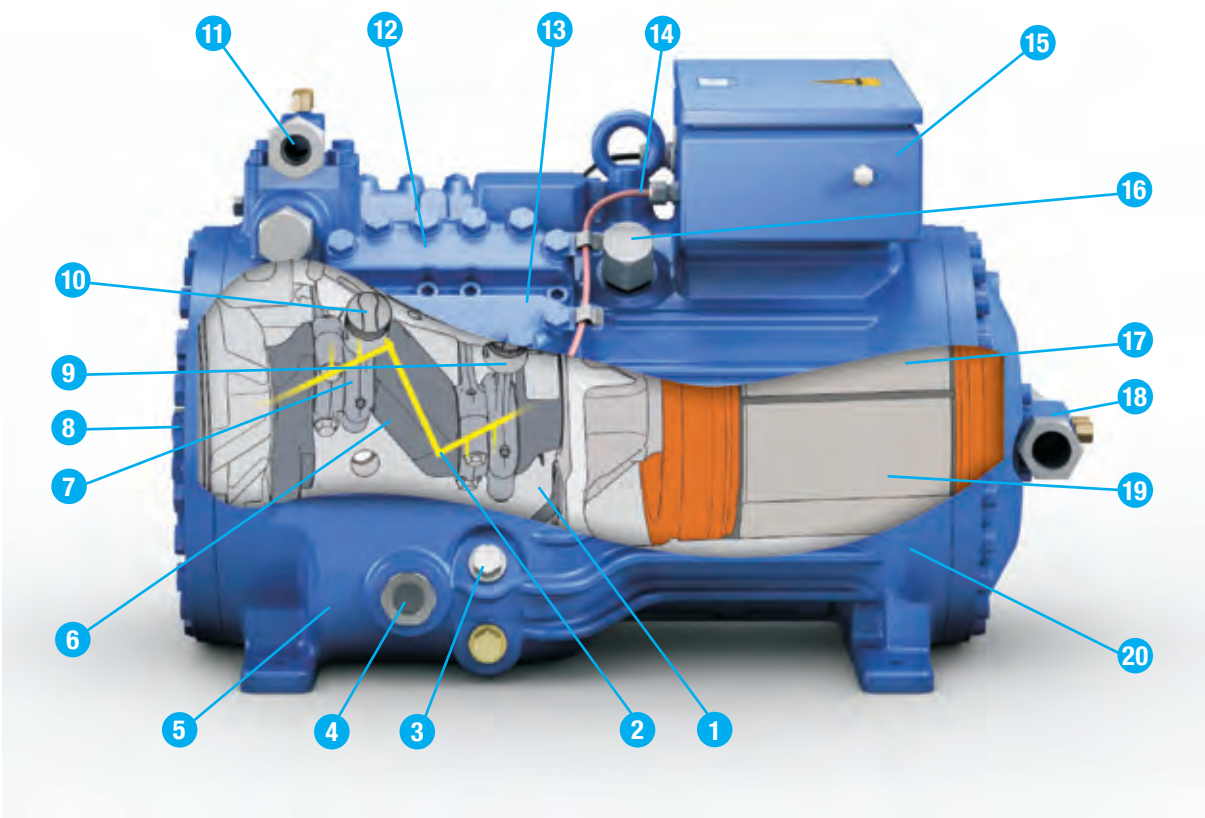

Designed for CO_2 - built for the future

Bock HG34 CO_2 T - A compressor packed with more than 15 years of CO_2 compressor experience.

1. Low oil throw through a calmed lubrication circuit, minimum oil foaming and oil mist
2. Oil supply of bearings through forced lubrication and optimal oil circulation
3. Prevention against oil overfilling
4. Calmed oil level for precise and safe indication of oil level in the sight glass
5. Oil sump heater
6. Tempered crankshaft with robust main bearing and optimised mass balance for highest running comfort
7. Weight-optimized connecting rod for highest running comfort
8. Reliable and safe oil supply with pump lubrication
9. Hard chromium plated piston rings in triple assembly
10. Special coating at the piston for minimum wear and high emergency running properties, piston heads with grooving of the suction reed valves outline for minimum clearance volume
11. Flexible connection options depending on the application (accessories)
12. Highest efficiency due to thermal separations at the cylinder cover and in the compressor housing, thereby reduction of superheating on the suction side
13. Valve system with optimized flow and channels in the housing ensure lowest pressure drops and highest efficiency
14. Thermal protection thermostat for pressure gas temperature monitoring (accessories)
15. Bock MP10 electronic motor protection, especially easy to operate because of status indicators
16. Pressure relief valve for HP and LP side
17. Suction gas cooled, variable speed control of motor by frequency converter (25 - 70 Hz)
18. Flexible connection options depending on the application (accessories)
19. Winding protection with PTC resistor sensors
20. High-strength spheroidal cast iron housing for maximum operating pressures on the low pressure- and high pressure side

In addition, the Bock characteristic features also apply to compressors of the type HG34 CO_2 T.

- Easy maintenance
- Large application area, subcritical and transcritical operation possible

96219-05.2013-Gb Subject to change without notice

Special features CO_2 transcritical

Based on the high CO2 pressure and the low temperature of the critical point of 31°C (74 bar), transcritical operating conditions occur at higher temperatures at the heat exchanger. In this case, in comparison to subcritical applications, the refrigerant CO2 can no longer be condensed. In this case, the refrigerant gas is desuperheated in a gas cooler. The temperature and the pressure are dependent on each other, compared to the subcritical operation.

A special feature in these operating points is the necessary regulation of the high pressure at the so-called optimal high pressure. In doing this, the greatest possible enthalpy difference at the evaporator and the lowest possible power consumption of the compressor should be reached. In this way, the maximum coefficient of performance (COP) of the system is achieved. An additional valve with intelligent control after the high-pressure heat exchanger is needed for this in the system.

For additional technical data see GEA Bock software.

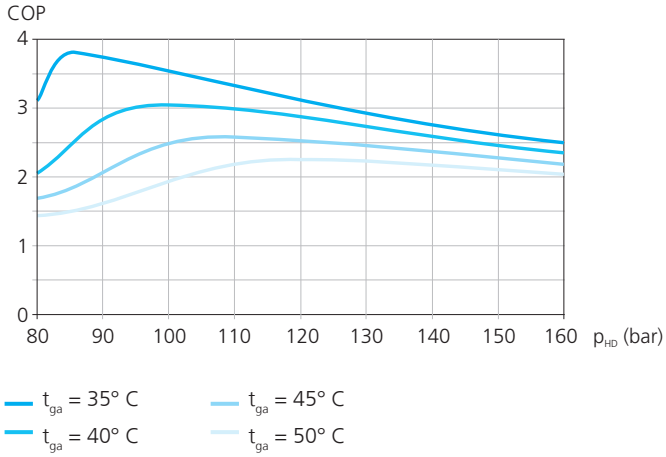

t_{ga} = Gas cooler outlet temperature

Limit conditions: isentrope compression

Evaporation pressure = 40 bar with internal heat exchanger

Compressor types

	ML-Version	For medium and low temperature applications at low and medium evaporating temperatures, oil charge C85E
	S-Version	For frequency control and extended application range, equipped with more powerful drive motor, oil charge C85E
	SH-Version	For heat pumps and at high evaporating temperatures, equipped with more powerful drive motor, oil charge C150E

CO_2 Operating limits — HGX2 CO_2 T

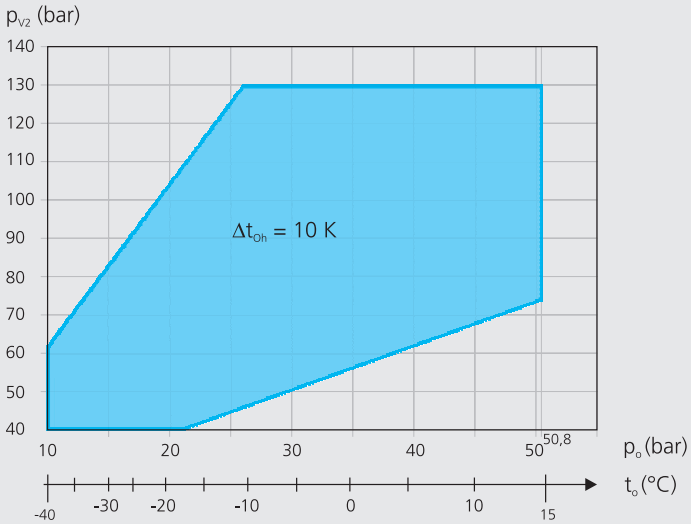

Unlimited application range

t_O Evaporating temperature (°C)
Δt_{Oh} Suction gas superheat (K)
p_o Suction pressure (bar)
p_{V2} Discharge end pressure (bar)

Max. permissible operating pressure (LP/HP)[1]: 100/150 bar

[1] LP = low pressure HP = high pressure

CO_2 Operating limits — HAX2 CO_2 T

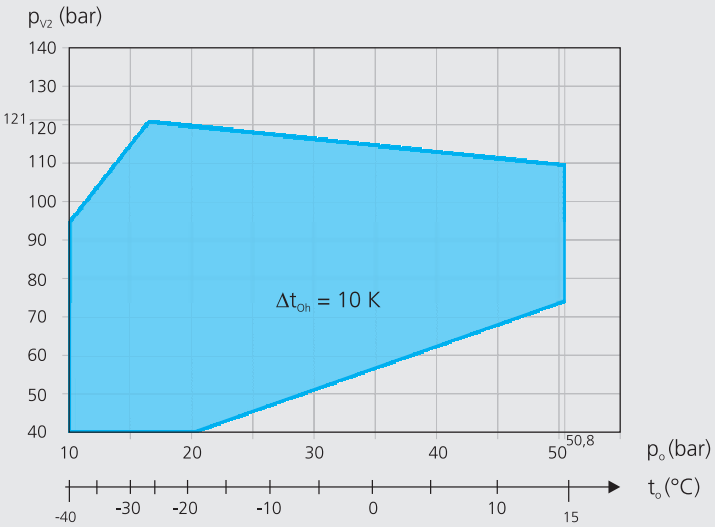

Unlimited application range

t_O Evaporating temperature (°C)
Δt_{Oh} Suction gas superheat (K)
p_o Suction pressure (bar)
p_{V2} Discharge end pressure (bar)

Max. permissible operating pressure (LP/HP)[1]: 100/150 bar

[1] LP = low pressure HP = high pressure

96219-05.2013-Gb Subject to change without notice

CO_2 Operating limits

HGX34 CO_2 T, HGX46 CO_2 T

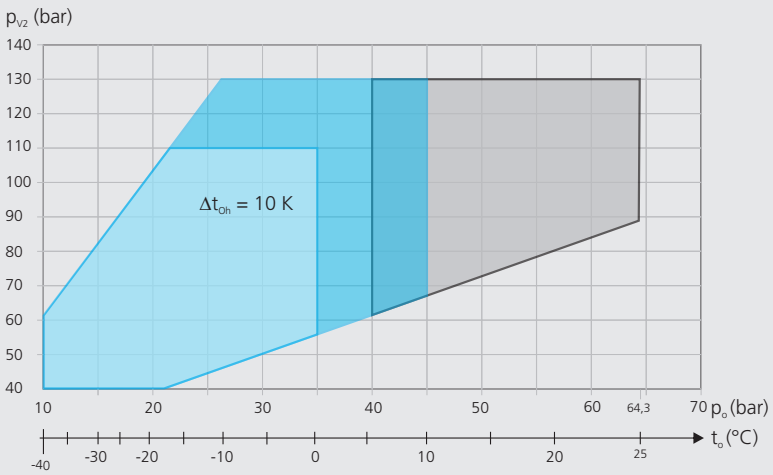

Compressor type ML

Compressor type S

Compressor type SH

t_O Evaporating temperature (°C)

Δt_{Oh} Suction gas superheat (K)

p_o Suction pressure (bar)

p_{V2} Discharge end pressure (bar)

Max. permissible operating pressure (LP/HP)[1]: 100/150 bar

[1] LP = low pressure HP = high pressure

CO_2 Notes

Operating limits

Compressor operation is possible within the limits shown on the application diagrams. Compressor application limits should not be chosen for design purposes or continuous operation.

Performance data

The performance data for CO_2 are based on 10 K suctiongas superheating at **50 Hz mains frequency.**

In case of subcritical operating conditions, no liquid subcooling takes place. The performance data for transcritical operating conditions are specified close to the "optimal high pressure". The optimal high pressure is thereby related to an ideal cyclic process.

Conversion factor for 60 Hz = 1,2

CO_2			Performance data											50 Hz
Type			Cooling capacity $\dot{Q}_o$ [W]											Power consumption P_e [kW]
			Evaporating temperature °C											
			15	10	5	0	-5	-10	-15	-20	-25	-30	-35	-40
HGX2/70-4 CO_2 T	t_c °C		SUBCRITICAL											
	10	Q							18600	15200	12300	9600	7300	5270
		P							4,02	4,19	4,25	4,19	4,04	3,79
	15	Q					24400	20400	16900	13700	10900	8460	6310	4420
		P					4,03	4,37	4,57	4,65	4,62	4,49	4,26	3,95
	20	Q				26100	22000	18300	15100	12200	9550	7300	5330	3580
		P				4,37	4,75	4,99	5,10	5,09	4,98	4,77	4,46	4,07
	25	Q			27100	23000	19300	16000	13100	10500	8130	6110	4330	
		P			4,77	5,18	5,45	5,59	5,60	5,51	5,31	5,01	4,63	
	30	Q		25500	21900	18500	15500	12800	10400	8220	6320	4650		
		P		5,23	5,67	5,97	6,13	6,17	6,09	5,91	5,62	5,24		
HGX2/70-4 CO_2 T	t_{ga} °C		TRANSCRITICAL											
	30	p_{V2}	75	75	75	75	75	75	75	75	75	75		
		Q	32000	27600	23600	20000	16700	13800	11200	8810	6750	4930		
		P	5,03	5,58	5,98	6,24	6,36	6,37	6,26	6,04	5,72	5,31		
	35	p_{V2}	85	85	85	90	90	90	90	90	90	80		
		Q	27700	23900	20500	18200	15100	12400	9850	7660	5720	2860		
		P	6,28	6,70	6,97	7,50	7,45	7,29	7,02	6,66	6,20	5,44		
	40	p_{V2}	100	100	100	100	105	105	105	100	90			
		Q	26000	22400	19100	16100	13700	11100	8750	6570	4010			
		P	7,94	8,17	8,27	8,25	8,42	8,12	7,73	7,05	6,20			
	45	p_{V2}	110	110	115	115	115	120	115	100				
		Q	23100	19900	17600	14800	12200	9990	7690	4870				
		P	8,95	9,08	9,49	9,33	9,07	9,01	8,24	7,05				
	50	p_{V2}	125	125	130	130	130	130	115					
		Q	21500	18600	16300	13600	11200	8910	6220					
		P	10,40	10,40	10,70	10,40	10,10	9,69	8,24					

Subcritical performance data 50 Hz

Relative to 10 K suction gas superheat without liquid subcooling

Transcritical performance data 50 Hz

Relative to 10 K suction gas superheat

The performance data are indicated at a high pressure level, which is close to an optimal high pressure level. Optimal high pressure is thereby related to an ideal cyclic process

t_c = Condensing temperature

t_{ga} = Gas cooler outlet temperature

p_{V2} = Pressure at the compressor outlet [bar]

Optimal high pressure is outside of the operating limits. Performance data are indicated at maximum possible high pressure.

CO_2			Performance data											50 Hz
Type			Cooling capacity $\dot{Q}_o$ [W]											Power consumption P_e [kW]
			Evaporating temperature °C											
			15	10	5	0	-5	-10	-15	-20	-25	-30	-35	-40
HAX2/70-4 CO_2 T	t_c °C		SUBCRITICAL											
	10	Q							19000	15900	13200	10800	8680	6830
		P							4,09	4,21	4,24	4,19	4,08	3,91
	15	Q					24400	20700	17500	14600	12100	9780	7820	6100
		P					4,16	4,42	4,58	4,64	4,61	4,51	4,34	4,13
	20	Q				25900	22200	18800	15800	13200	10800	8730	6930	5350
		P				4,48	4,79	4,98	5,07	5,07	4,98	4,82	4,60	4,32
	25	Q			26700	23000	19600	16600	14000	11600	9430	7590	5970	4540
		P			4,84	5,20	5,44	5,56	5,58	5,50	5,35	5,12	4,83	4,50
	30	Q		25000	21700	18700	16000	13500	11300	9290	7560	6030	4690	3520
		P		5,28	5,68	5,96	6,11	6,15	6,09	5,94	5,71	5,41	5,06	4,66
HAX2/70-4 CO_2 T	t_{ga} °C		TRANSCRITICAL											
	30	p_{V2}	75	75	75	75	75	75	75	75	75	75	75	80
		Q	31000	27100	23500	20200	17200	14500	12100	9980	8110	6460	5020	3770
		P	5,10	5,61	5,98	6,22	6,34	6,35	6,26	6,08	5,83	5,51	5,13	4,78
	35	p_{V2}	85	85	85	90	90	90	90	90	90	95	95	95
		Q	27100	23700	20600	18800	15900	13400	11100	9060	7270	5770	4350	3090
		P	6,32	6,72	6,98	7,54	7,50	7,35	7,12	6,80	6,40	6,08	5,53	4,95
	40	p_{V2}	100	100	100	100	105	105	105	105	110	110	100	95
		Q	25700	22400	19400	16600	14600	12200	10100	8140	6540	5040	3670	2490
		P	8,07	8,29	8,39	8,36	8,57	8,27	7,89	7,44	7,07	6,45	5,62	4,95
	45	p_{V2}	110	110	110	110	115	115	115	115	115	110		
		Q	22700	19900	17200	14800	12900	10800	8860	7160	5660	4240		
		P	9,19	9,30	9,29	9,16	9,26	8,87	8,40	7,85	7,23	6,45		
	50	p_{V2}	110	110	110	110	115	115	115	115	115	110		
		Q	17000	15000	13100	11300	10500	8710	7170	5800	4580	3240		
		P	9,19	9,30	9,29	9,16	9,26	8,87	8,40	7,85	7,23	6,45		

Subcritical performance data 50 Hz

Relative to 10 K suction gas superheat without liquid subcooling

Transcritical performance data 50 Hz

Relative to 10 K suction gas superheat

The performance data are indicated at a high pressure level, which is close to an optimal high pressure level. Optimal high pressure is thereby related to an ideal cyclic process

t_c = Condensing temperature

t_{ga} = Gas cooler outlet temperature

p_{V2} = Pressure at the compressor outlet [bar]

Optimal high pressure is outside of the operating limits. Performance data are indicated at maximum possible high pressure.

CO_2			Performance data											50 Hz
Type			Cooling capacity $\dot{Q}_o$ [W]											Power consumption P_e [kW]
			Evaporating temperature °C											
			15	10	5	0	-5	-10	-15	-20	-25	-30	-35	-40
HGX2/90-4 CO_2 T	t_c °C		SUBCRITICAL											
	10	Q							23600	19400	15800	12600	9760	7280
		P							5,21	5,34	5,35	5,25	5,04	4,71
	15	Q					30800	25800	21500	17600	14200	11200	8560	6240
		P					5,39	5,69	5,87	5,93	5,87	5,69	5,39	4,98
	20	Q				32900	27800	23300	19300	15700	12600	9760	7330	5190
		P				5,85	6,21	6,44	6,54	6,51	6,37	6,10	5,72	5,21
	25	Q			34100	29100	24600	20500	16800	13600	10800	8240	6050	
		P			6,37	6,78	7,05	7,19	7,20	7,09	6,85	6,48	5,99	
	30	Q		32200	27700	23600	19900	16500	13500	10800	8400	6330		
		P		6,98	7,43	7,74	7,92	7,96	7,86	7,64	7,29	6,80		
HGX2/90-4 CO_2 T	t_{ga} °C		TRANSCRITICAL											
	30	p_{V2}	75	75	75	75	75	75	75	75	75	75		
		Q	40400	35000	30000	25500	21400	17700	14500	11600	8990	6720		
		P	6,83	7,39	7,80	8,08	8,22	8,22	8,09	7,82	7,42	6,90		
	35	p_{V2}	85	85	85	90	90	90	90	90	90	80		
		Q	35200	30400	26100	23300	19400	16000	12800	10100	7600	3900		
		P	8,31	8,75	9,04	9,70	9,64	9,42	9,07	8,58	7,94	7,03		
	40	p_{V2}	100	100	100	100	105	105	105	100	90			
		Q	33200	28700	24400	20600	17600	14300	11300	8560	5330			
		P	10,30	10,60	10,70	10,60	10,70	10,30	9,75	8,90	7,94			
	45	p_{V2}	110	110	115	115	115	120	115	100				
		Q	29500	25400	22500	18900	15500	12700	9800	6340				
		P	11,60	11,70	12,10	11,80	11,40	10,90	10,00	8,90				
	50	p_{V2}	125	125	130	130	130	130	115					
		Q	27500	23700	20600	17200	14000	11200	7930					
		P	13,40	13,30	13,30	12,80	12,10	11,20	10,00					

Subcritical performance data 50 Hz

Relative to 10 K suction gas superheat without liquid subcooling

Transcritical performance data 50 Hz

Relative to 10 K suction gas superheat

The performance data are indicated at a high pressure level, which is close to an optimal high pressure level. Optimal high pressure is thereby related to an ideal cyclic process

t_c = Condensing temperature

t_{ga} = Gas cooler outlet temperature

p_{V2} = Pressure at the compressor outlet [bar]

Optimal high pressure is outside of the operating limits. Performance data are indicated at maximum possible high pressure.

96219-05.2013-Gb Subject to change without notice

CO_2			Performance data											50 Hz
Type			Cooling capacity $\dot{Q}_o$ [W]											Power consumption P_e [kW]
			Evaporating temperature °C											
			15	10	5	0	-5	-10	-15	-20	-25	-30	-35	-40
HAX2/90-4 CO_2 T	t_c °C		SUBCRITICAL											
	10	Q							24300	20300	16800	13800	11100	8630
		P							5,11	5,24	5,25	5,18	5,01	4,77
	15	Q					31200	26500	22400	18700	15400	12500	9950	7730
		P					5,33	5,62	5,78	5,84	5,79	5,65	5,42	5,11
	20	Q				33300	28400	24100	20300	16900	13900	11200	8850	6810
		P				5,82	6,16	6,37	6,46	6,45	6,33	6,11	5,81	5,42
	25	Q			34300	29600	25300	21400	17900	14900	12200	9750	7660	5830
		P			6,37	6,76	7,01	7,14	7,15	7,06	6,85	6,56	6,17	5,70
	30	Q		32200	28000	24100	20600	17400	14600	12000	9770	7800	6080	4560
		P		7,00	7,43	7,73	7,89	7,93	7,85	7,66	7,37	6,98	6,50	5,94
HAX2/90-4 CO_2 T	t_{ga} °C		TRANSCRITICAL											
	30	p_{V2}	75	75	75	75	75	75	75	75	75	75	75	80
		Q	40200	35100	30400	26200	22300	18800	15700	13000	10600	8410	6540	4970
		P	6,86	7,41	7,81	8,07	8,20	8,21	8,09	7,87	7,54	7,12	6,61	6,12
	35	p_{V2}	85	85	85	90	90	90	90	90	90	95	95	95
		Q	35100	30700	26600	24300	20700	17400	14500	11900	9580	7720	5890	4280
		P	8,37	8,80	9,08	9,77	9,72	9,55	9,25	8,85	8,34	7,90	7,14	6,30
	40	p_{V2}	100	100	100	100	105	105	105	105	110	110	100	95
		Q	33300	29100	25300	21700	19100	16100	13300	10900	8910	6970	5040	3450
		P	10,50	10,70	10,80	10,80	11,10	10,70	10,20	9,69	9,19	8,33	7,23	6,30
	45	p_{V2}	110	110	110	110	115	115	115	115	115	110	100	
		Q	29700	26100	22600	19400	17200	14500	12000	9760	7810	5860	3720	
		P	11,90	12,00	12,00	11,80	12,00	11,50	10,90	10,20	9,38	8,33	7,23	
	50	p_{V2}	110	110	110	110	115	115	115	115	115	110		
		Q	22300	19700	17200	14800	13900	11700	9680	7890	6310	4480		
		P	11,90	12,00	12,00	11,80	12,00	11,50	10,90	10,20	9,38	8,33		

Subcritical performance data 50 Hz

Relative to 10 K suction gas superheat without liquid subcooling

Transcritical performance data 50 Hz

Relative to 10 K suction gas superheat

The performance data are indicated at a high pressure level, which is close to an optimal high pressure level. Optimal high pressure is thereby related to an ideal cyclic process

t_c = Condensing temperature

t_{ga} = Gas cooler outlet temperature

p_{V2} = Pressure at the compressor outlet [bar]

Optimal high pressure is outside of the operating limits. Performance data are indicated at maximum possible high pressure.

CO_2			Performance data											50 Hz
Type			Cooling capacity $\dot{Q}_o$ [W]											Power consumption P_e [kW]
			Evaporating temperature °C											
			15	10	5	0	-5	-10	-15	-20	-25	-30	-35	-40
HGX2/110-4 CO_2 T	t_c °C		SUBCRITICAL											
	10	Q							29700	24500	19900	15900	12300	9160
		P							6,57	6,73	6,75	6,62	6,35	5,93
	15	Q					38800	32600	27100	22200	17900	14100	10800	7840
		P					6,79	7,17	7,40	7,47	7,39	7,17	6,79	6,28
	20	Q				41400	35100	29400	24300	19800	15800	12300	9220	6520
		P				7,37	7,82	8,11	8,24	8,21	8,02	7,69	7,20	6,57
	25	Q			443000	36600	30900	25800	21200	17100	13600	10400	7610	
		P			8,03	8,54	8,89	9,06	9,08	8,93	8,62	8,16	7,55	
	30	Q		40500	34900	29700	25000	20700	17000	13600	10600	7960		
		P		8,79	9,36	9,76	9,98	10,00	9,91	9,63	9,18	8,57		
HGX2/110-4 CO_2 T	t_{ga} °C		TRANSCRITICAL											
	30	p_{V2}	75	75	75	75	75	75	75	75	75	75		
		Q	50900	44000	37800	32100	26900	22300	18200	14600	11400	8460		
		P	8,60	9,31	9,83	10,10	10,30	10,30	10,10	9,85	9,35	8,69		
	35	p_{V2}	85	85	85	90	90	90	90	90	90	80		
		Q	44200	38300	32800	29300	24400	20100	16200	12700	9580	4910		
		P	10,40	11,00	11,30	12,20	12,10	11,80	11,40	10,80	10,00	8,86		
	40	p_{V2}	100	100	100	100	105	105	105	100	90			
		Q	41800	36000	30700	25900	22100	17900	14300	10800	6720			
		P	13,00	13,30	13,50	13,40	13,50	13,00	12,20	11,20	10,00			
	45	p_{V2}	110	110	115	115	115	120	115	100				
		Q	37100	32000	28300	23700	19500	16000	12400	7990				
		P	14,70	14,80	15,30	14,90	14,30	13,80	12,60	11,20				
	50	p_{V2}	125	125	130	130	130	130	115					
		Q	34600	29800	26000	21600	17700	14100	10000					
		P	16,90	16,70	16,80	16,10	15,20	14,10	12,60					

Subcritical performance data 50 Hz

Relative to 10 K suction gas superheat without liquid subcooling

Transcritical performance data 50 Hz

Relative to 10 K suction gas superheat

The performance data are indicated at a high pressure level, which is close to an optimal high pressure level. Optimal high pressure is thereby related to an ideal cyclic process

t_c = Condensing temperature

t_{ga} = Gas cooler outlet temperature

p_{V2} = Pressure at the compressor outlet [bar]

Optimal high pressure is outside of the operating limits. Performance data are indicated at maximum possible high pressure.

96219-05.2013-Gb Subject to change without notice

CO_2			Performance data											50 Hz
Type			Cooling capacity $\dot{Q}_o$ [W]											Power consumption P_e [kW]
			Evaporating temperature °C											
			15	10	5	0	-5	-10	-15	-20	-25	-30	-35	-40
HAX2/110-4 CO_2 T	t_c °C		SUBCRITICAL											
	10	Q							30600	25600	21200	17300	13900	10900
		P							6,44	6,60	6,62	6,52	6,32	6,01
	15	Q					39300	33400	28100	23500	19400	15700	12600	9730
		P					6,72	7,08	7,29	7,36	7,30	7,12	6,83	6,44
	20	Q				41900	35800	30400	25500	21200	17400	14100	11200	8560
		P				7,34	7,76	8,03	8,14	8,12	7,97	7,70	7,32	6,83
	25	Q			43200	37200	31800	26900	22600	18700	15300	12300	9640	7330
		P			8,03	8,51	8,83	9,00	9,01	8,89	8,64	8,26	7,78	7,19
	30	Q		40500	35200	30400	25900	21900	18300	15200	12300	9820	7650	5740
		P		8,82	9,36	9,74	9,94	9,99	9,89	9,65	9,29	8,80	8,19	7,49
HAX2/110-4 CO_2 T	t_{ga} °C		TRANSCRITICAL											
	30	p_{V2}	75	75	75	75	75	75	75	75	75	75	75	80
		Q	50500	44200	38300	32900	28100	23700	19800	16300	13300	10600	8220	6250
		P	8,64	9,33	9,84	10,10	10,30	10,30	10,20	9,92	9,50	8,97	8,33	7,71
	35	p_{V2}	85	85	85	90	90	90	90	90	90	95	95	95
		Q	44100	38600	33500	30600	26000	21900	18200	15000	12100	9720	7420	5390
		P	10,50	11,00	11,40	12,30	12,20	12,00	11,60	11,10	10,50	9,95	9,00	7,94
	40	p_{V2}	1100	100	100	100	105	105	105	105	110	110	100	95
		Q	41900	36700	31800	27300	24100	20200	16800	13700	11300	8780	6350	4340
		P	13,20	13,50	13,70	13,60	14,00	13,50	12,90	12,20	11,50	10,40	9,11	7,94
	45	p_{V2}	110	110	110	110	115	115	115	115	115	110	100	
		Q	37400	32800	28500	24400	21700	18200	15100	12300	9830	7390	4680	
		P	15,00	15,20	15,10	14,90	15,10	14,50	13,70	12,80	11,80	10,40	9,11	
	50	p_{V2}	110	110	110	110	115	115	115	115	115	110		
		Q	28000	24800	21600	18700	17500	14700	12200	9940	7950	5640		
		P	15,00	15,20	15,10	14,90	15,10	14,50	13,70	12,80	11,80	10,40		

Subcritical performance data 50 Hz

Relative to 10 K suction gas superheat without liquid subcooling

Transcritical performance data 50 Hz

Relative to 10 K suction gas superheat

The performance data are indicated at a high pressure level, which is close to an optimal high pressure level. Optimal high pressure is thereby related to an ideal cyclic process

t_c = Condensing temperature

t_{ga} = Gas cooler outlet temperature

p_{V2} = Pressure at the compressor outlet [bar]

Optimal high pressure is outside of the operating limits. Performance data are indicated at maximum possible high pressure.

CO_2 — Performance data — 50 Hz

Cooling capacity $\dot{Q}_o$ [W] — Power consumption P_e [kW]

Evaporating temperature °C

t_c °C		HGX34/110-4 SH CO_2 T 25	20	15	10	5	HGX34/110-4 ML CO_2 T 0	-5	-10	-15	-20	-25	-30	-35	-40
		SUBCRITICAL													
10	Q									31700	26500	22000	18000	14400	11400
	P									6,01	6,27	6,38	6,35	6,17	5,85
15	Q							40500	34500	29100	24300	20000	16300	13000	10100
	P							6,14	6,59	6,89	7,05	7,06	6,93	6,65	6,22
20	Q						42900	36800	31200	26200	21800	18000	14500	11500	8870
	P						6,77	7,26	7,60	7,79	7,84	7,74	7,49	7,10	6,56
25	Q					45600	38000	32500	27500	23100	19200	15700	12700	9930	
	P					7,90	8,03	8,40	8,63	8,70	8,63	8,41	8,04	7,52	
30	Q				42600	36500	30800	26400	22300	18700	15500	12600	10100		
	P				8,38	9,06	9,34	9,58	9,67	9,61	9,41	9,05	8,54		
t_{ga} °C		TRANSCRITICAL													
30	p_{V2}	90	85	75	75	75	75	75	75	75	75	75	75		
	Q	74400	64500	53400	46100	39400	33400	28500	24100	20200	16700	13600	10900		
	P	8,85	8,75	7,88	8,87	9,50	9,79	9,99	10,00	9,93	9,67	9,26	8,71		
35	p_{V2}	90	85	85	85	85	90	90	90	90	90	85			
	Q	63600	52500	45800	39500	33700	30700	26200	22100	18400	15200	11700			
	P	8,85	8,75	9,76	10,50	11,00	11,90	11,90	11,70	11,30	10,80	9,92			
40	p_{V2}	95	95	100	100	100	100	105	105	105	100	85			
	Q	51500	45400	42400	36600	31200	27300	24100	20300	16900	13400	5840			
	P	9,95	10,80	12,50	13,10	13,20	13,30	13,60	13,10	12,50	11,40	9,92			
45	p_{V2}	110	110	110	110	115	110	110	110	110	100				
	Q	48500	42800	37300	32200	28600	24300	20700	17500	14500	9910				
	P	13,20	13,80	14,30	14,70	15,30	14,40	14,10	13,50	12,80	11,40				
50	p_{V2}	120	120	125	125	130	110	110	110	110	100				
	Q	42600	37700	34600	29900	26400	18600	15900	13400	11100	6390				
	P	15,20	15,70	16,90	16,90	17,20	14,40	14,10	13,50	12,80	11,40				

HGX34/110-4 S CO_2 T

t_c °C															
		SUBCRITICAL													
10	Q									31500	26200	21600	17600	14100	11100
	P									6,07	6,30	6,40	6,36	6,19	5,92
15	Q							40900	34600	29000	24100	19800	16100	12900	10100
	P							6,20	6,65	6,93	7,06	7,06	6,92	6,66	6,29
20	Q						43600	37100	31400	26300	21800	17900	14500	11600	9010
	P						6,80	7,30	7,63	7,80	7,83	7,71	7,47	7,10	6,63
25	Q					45000	38600	32900	27700	23200	19200	15700	12700	10100	
	P					7,49	8,04	8,42	8,63	8,68	8,59	8,35	7,99	7,52	
30	Q				42200	36500	31300	26600	22400	18700	15400	12600	10200		
	P				8,30	8,90	9,31	9,56	9,64	9,56	9,34	8,98	8,50		
t_{ga} °C		TRANSCRITICAL													
30	p_{V2}				75	75	75	75	75	75	75	75	75		
	Q				45800	39500	33800	28700	24200	20200	16700	13700	11000		
	P				8,84	9,39	9,76	9,95	9,98	9,86	9,59	9,19	8,66		
35	p_{V2}				85	85	90	90	90	90	90	90	80		
	Q				39500	34100	30900	26300	22100	18500	15200	12300	6570		
	P				10,60	11,00	11,80	11,80	11,60	11,20	10,70	10,10	8,92		
40	p_{V2}				100	100	100	105	105	105	100	90			
	Q				36800	31800	27300	23900	20100	16700	13300	8620			
	P				13,00	13,10	13,10	13,40	13,00	12,40	11,40	10,10			
45	p_{V2}				110	115	115	115	120	115	100				
	Q				32500	29200	25100	21300	18300	14800	9850				
	P				14,50	15,10	14,80	14,40	14,20	13,10	11,40				
50	p_{V2}				125	130	130	130	130	115	100				
	Q				30000	26700	22900	19400	16300	12000	6360				
	P				16,50	16,80	16,40	15,70	14,90	13,10	11,40				

Subcritical performance data 50 Hz

Relative to 10 K suction gas superheat without liquid subcooling

Transcritical performance data 50 Hz

Relative to 10 K suction gas superheat

The performance data are indicated at a high pressure level, which is close to an optimal high pressure level. Optimal high pressure is thereby related to an ideal cyclic process.

t_c = Condensing temperature

t_{ga} = Gas cooler outlet temperature

p_{V2} = Pressure at the compressor outlet [bar]

Optimal high pressure is outside of the operating limits. Performance data are indicated at minimum or maximum possible high pressure.

96219-05.2013-Gb Subject to change without notice

CO_2 Performance data 50 Hz

Cooling capacity $\dot{Q}_o$ [W] — Power consumption P_e [kW]

Evaporating temperature °C

t_c °C		HGX34/130-4 SH CO_2 T 25	20	15	10	5	HGX34/130-4 ML CO_2 T 0	-5	-10	-15	-20	-25	-30	-35	-40
		SUBCRITICAL													
10	Q									36100	30200	25000	20400	16400	12900
	P									6,85	7,12	7,23	7,18	6,99	6,66
15	Q							46100	39200	33000	27600	22700	18500	14800	11500
	P							7,01	7,52	7,85	8,00	8,00	7,83	7,53	7,09
20	Q						48800	41800	35500	29800	24800	20400	16500	13100	10100
	P						7,70	8,28	8,67	8,87	8,90	8,77	8,49	8,06	7,50
25	Q					48800	43200	36900	31300	26300	21800	17800	14300	11300	
	P					8,98	9,16	9,60	9,85	9,92	9,81	9,55	9,13	8,56	
30	Q				47300	40400	35000	29900	25300	21200	17500	14300	11400		
	P				9,53	10,30	10,60	10,90	11,00	10,90	10,70	10,30	9,73		
t_{ga} °C		TRANSCRITICAL													
30	p_{V2}	90	85	75	75	75	75	75	75	75	75	75	75		
	Q	84200	73000	59800	51500	44000	37900	32400	27400	22900	18900	15400	12300		
	P	10,00	9,96	8,95	10,00	10,80	11,20	11,40	11,40	11,30	11,00	10,50	9,93		
35	p_{V2}	90	85	85	85	85	90	90	90	90	90	85			
	Q	71900	59400	51900	44900	38400	34800	29700	25000	20900	17200	13200			
	P	10,00	9,96	11,10	12,00	12,50	13,70	13,70	13,40	13,00	12,40	11,30			
40	p_{V2}	95	95	100	100	100	100	105	105	105	100	85			
	Q	58400	51600	48200	41600	35600	30900	27200	22900	19100	15200	6610			
	P	11,30	12,30	14,30	15,00	15,20	15,20	15,50	15,00	14,30	13,10	11,30			
45	p_{V2}	110	110	110	110	115	110	110	110	110	100				
	Q	54900	48400	42300	36500	32300	27500	23400	19700	16400	11300				
	P	15,10	15,80	16,40	16,90	17,60	16,60	16,10	15,40	14,60	13,10				
50	p_{V2}	120	120	125	125	130	110	110	110	110	100				
	Q	48200	42600	39000	33600	29600	21000	17900	15100	12600	7230				
	P	117,50	18,00	19,40	19,50	19,80	16,60	16,10	15,40	14,60	13,10				

t_c °C		HGX34/130-4 S CO_2 T													
		SUBCRITICAL													
10	Q									36000	29900	24600	20000	16100	12700
	P									6,87	7,14	7,25	7,20	7,02	6,70
15	Q							46600	39400	33000	27400	22500	18300	14600	11500
	P							7,03	7,54	7,86	8,01	8,00	7,85	7,55	7,12
20	Q						49700	42300	35700	29800	24700	20300	16400	13100	10300
	P						7,72	8,29	8,67	8,86	8,89	8,76	8,48	8,06	7,51
25	Q					51200	43900	37300	31500	26300	21700	17800	14400	11400	
	P					8,51	9,14	9,57	9,81	9,87	9,76	9,50	9,08	8,53	
30	Q				48000	41500	35600	30200	25500	21200	17500	14300	11500		
	P				9,43	10,10	10,60	10,80	10,90	10,80	10,60	10,20	9,66		
t_{ga} °C		TRANSCRITICAL													
30	p_{V2}				75	75	75	75	75	75	75	75	75		
	Q				52100	44900	38400	32600	27500	22900	19000	15500	12500		
	P				10,00	10,60	11,10	11,30	11,30	11,20	10,90	10,40	9,85		
35	p_{V2}				85	85	90	90	90	90	90	90	80		
	Q				44900	38800	35100	29800	25100	20900	17200	14000	7440		
	P				12,10	12,50	13,50	13,50	13,20	12,80	12,20	11,50	10,10		
40	p_{V2}				100	100	100	105	105	105	100	90			
	Q				41800	36100	30900	27100	22800	18900	15100	9760			
	P				14,90	15,00	15,00	15,40	14,90	14,20	13,00	11,50			
45	p_{V2}				110	115	115	115	120	115	100				
	Q				36800	33100	28400	24100	20600	16700	11200				
	P				16,60	17,30	17,00	16,50	16,30	15,00	13,00				
50	p_{V2}				125	130	130	130	130	115	100				
	Q				34000	30200	25900	22000	18400	13600	7190				
	P				19,00	19,40	18,80	18,10	17,10	15,00	13,00				

Subcritical performance data 50 Hz

Relative to 10 K suction gas superheat without liquid subcooling

Transcritical performance data 50 Hz

Relative to 10 K suction gas superheat

The performance data are indicated at a high pressure level, which is close to an optimal high pressure level. Optimal high pressure is thereby related to an ideal cyclic process.

t_c = Condensing temperature

t_{ga} = Gas cooler outlet temperature

p_{V2} = Pressure at the compressor outlet [bar]

Optimal high pressure is outside of the operating limits. Performance data are indicated at minimum or maximum possible high pressure.

CO_2 — Performance data — 50 Hz

Cooling capacity $\dot{Q}_o$ [W] — Power consumption P_e [kW]

Evaporating temperature °C

t_c °C		HGX34/150-4 SH CO_2 T 25	20	15	10	5	HGX34/150-4 ML CO_2 T 0	-5	-10	-15	-20	-25	-30	-35	-40
		SUBCRITICAL													
10	Q									41200	34500	28600	23300	18800	14800
	P									7,80	8,12	8,24	8,19	7,97	7,59
15	Q							52700	44800	37800	31500	26000	21200	16900	13200
	P							7,96	8,55	8,93	9,11	9,11	8,92	8,58	8,08
20	Q						55800	47800	40500	34100	28400	23300	18900	15000	11600
	P						8,75	9,41	9,86	10,00	10,10	9,97	9,65	9,16	8,53
25	Q					59300	49300	42200	35800	30000	24900	20400	16400	13000	
	P					10,00	10,40	10,90	11,10	11,20	11,10	10,80	10,30	9,71	
30	Q				55500	47500	40000	34200	29000	24300	20100	16400	13100		
	P				10,80	11,70	12,10	12,40	12,50	12,40	12,10	11,60	11,00		
t_{ga} °C		TRANSCRITICAL													
30	p_{V2}	90	85	75	75	75	75	75	75	75	75	75	75		
	Q	96800	84000	69500	60000	51300	43300	37000	31300	26200	21700	17700	14100		
	P	11,50	11,40	10,20	11,50	12,30	12,70	12,90	12,90	12,80	12,40	11,90	11,20		
35	p_{V2}	90	85	85	85	85	90	90	90	90	90	85			
	Q	82800	68400	59500	51400	43900	39900	34000	28700	23900	19700	15200			
	P	11,50	11,40	12,70	13,80	14,30	15,50	15,40	15,10	14,70	14,00	12,80			
40	p_{V2}	95	95	100	100	100	100	105	105	105	100	85			
	Q	67000	59100	55200	47500	40600	35400	31200	26300	21900	17400	7590			
	P	12,90	14,10	16,40	17,10	17,30	17,20	17,60	17,00	16,20	14,90	12,80			
45	p_{V2}	110	110	110	110	115	110	110	110	110	100				
	Q	63000	55600	48500	41900	37200	31500	26900	22600	18900	12900				
	P	17,10	17,90	18,70	19,10	20,00	18,80	18,30	17,60	16,70	14,90				
50	p_{V2}	120	120	125	125	130	110	110	110	110	100				
	Q	55300	49000	44900	38900	34300	24100	20600	17400	14500	8310				
	P	19,80	20,40	22,00	22,10	22,50	18,80	18,30	17,60	16,70	14,90				

t_c °C		HGX34/150-4 S CO_2 T													
		SUBCRITICAL													
10	Q									41100	34200	28100	22900	18400	14500
	P									7,84	8,15	8,28	8,22	8,01	7,65
15	Q							53300	45100	37800	31400	25800	21000	16800	13200
	P							8,02	8,61	8,98	9,15	9,14	8,96	8,62	8,13
20	Q						56900	48400	40900	34200	28400	23300	18900	15100	11800
	P						8,81	9,47	9,90	10,10	10,10	10,00	9,68	9,20	8,58
25	Q					58700	50300	42800	36100	30200	25000	20400	16500	13200	
	P					9,72	10,40	10,90	11,20	11,20	11,10	10,80	10,30	9,75	
30	Q				54900	47500	40800	34700	29200	24400	20100	16400	13200		
	P				10,70	11,50	12,10	12,40	12,50	12,40	12,10	11,60	11,00		
t_{ga} °C		TRANSCRITICAL													
30	p_{V2}				75	75	75	75	75	75	75	75	75		
	Q				59700	51400	44000	37400	31500	26300	21800	17800	14400		
	P				11,40	12,20	12,70	12,90	12,90	12,80	12,40	11,90	11,20		
35	p_{V2}				85	85	90	90	90	90	90	90	80		
	Q				51400	44400	40200	34200	28800	24000	19800	16100	8570		
	P				13,80	14,30	15,40	15,40	15,10	14,60	14,00	13,10	11,60		
40	p_{V2}				100	100	100	105	105	105	100	90			
	Q				47900	41400	35500	31100	26200	21800	17400	11300			
	P				17,00	17,10	17,10	17,50	16,90	16,20	14,80	13,10			
45	p_{V2}				110	115	115	115	120	115	100				
	Q				42200	38000	32600	27700	23800	19300	12900				
	P				18,90	19,70	19,30	18,80	18,50	17,10	14,80				
50	p_{V2}				125	130	130	130	130	115	100				
	Q				39000	34800	29800	25300	21200	15600	8280				
	P				21,50	22,00	21,40	20,50	19,50	17,10	14,80				

Subcritical performance data 50 Hz

Relative to 10 K suction gas superheat without liquid subcooling

Transcritical performance data 50 Hz

Relative to 10 K suction gas superheat

The performance data are indicated at a high pressure level, which is close to an optimal high pressure level. Optimal high pressure is thereby related to an ideal cyclic process.

t_c = Condensing temperature

t_{ga} = Gas cooler outlet temperature

p_{V2} = Pressure at the compressor outlet [bar]

Optimal high pressure is outside of the operating limits. Performance data are indicated at minimum or maximum possible high pressure.

96219-05.2013-Gb Subject to change without notice

CO_2 — Performance data — 50 Hz

Cooling capacity $\dot{Q}_o$ [W] — Power consumption P_e [kW]

Evaporating temperature °C

t_c °C		HGX34/170-4 SH CO_2 T 25	20	15	10	5	HGX34/170-4 ML CO_2 T 0	-5	-10	-15	-20	-25	-30	-35	-40
		SUBCRITICAL													
10	Q									46200	38600	32000	26100	21000	16500
	P									8,73	9,09	9,23	9,16	8,92	8,50
15	Q							59000	50200	42300	35300	29100	23600	18900	14700
	P							8,91	9,58	10,00	10,20	10,20	10,00	9,61	9,04
20	Q						62400	53400	45400	38100	31700	26100	21100	16700	12900
	P						9,81	10,50	11,00	11,30	11,30	11,10	10,80	10,20	9,56
25	Q					67700	55200	47200	40000	33600	27800	22800	18300	14400	
	P					11,20	11,60	12,20	12,50	12,60	12,50	12,10	11,60	10,90	
30	Q				62700	53900	44700	38300	32400	27100	22400	18300	14600		
	P				12,00	13,10	13,60	13,90	14,00	13,90	13,60	13,10	12,30		
t_{ga} °C		TRANSCRITICAL													
30	p_{V2}	90	85	75	75	75	75	75	75	75	75	75	75		
	Q	108000	93500	78200	67600	58000	48400	41400	35000	29300	24200	19700	15700		
	P	12,80	12,80	11,40	12,80	13,80	14,30	14,50	14,60	14,40	14,00	13,40	12,60		
35	p_{V2}	90	85	85	85	85	90	90	90	90	90	85			
	Q	91800	76200	66400	57500	49400	44400	37900	32000	26700	21900	16900			
	P	12,80	12,80	14,30	15,40	16,20	17,50	17,40	17,10	16,50	15,80	14,40			
40	p_{V2}	95	95	100	100	100	100	105	105	105	100	85			
	Q	74200	65500	61100	52800	45300	39400	34700	29300	24300	19400	8450			
	P	14,50	15,90	18,40	19,10	19,50	19,50	20,00	19,30	18,30	16,80	14,40			
45	p_{V2}	110	110	110	110	115	110	110	110	110	100				
	Q	70000	61700	53700	46400	41400	35100	29900	25200	21000	14400				
	P	19,30	20,30	21,00	21,50	22,60	21,30	20,70	19,90	18,90	16,80				
50	p_{V2}	120	120	125	125	130	110	110	110	110	100				
	Q	62000	54700	50000	43100	38100	26800	22900	19300	16100	9240				
	P	22,40	23,10	24,80	24,80	25,50	21,30	20,70	19,90	18,90	16,80				

t_c °C		HGX34/170-4 S CO_2 T													
		SUBCRITICAL													
10	Q									46000	38200	31500	25600	20500	16200
	P									8,77	9,12	9,26	9,20	8,96	8,55
15	Q							59700	50500	42300	35100	28800	23400	18700	14700
	P							8,97	9,63	10,00	10,20	10,20	10,00	9,65	9,10
20	Q						63700	54200	45700	38300	31700	26000	21100	16800	13200
	P						9,86	10,60	11,00	11,30	11,30	11,20	10,80	10,30	9,60
25	Q					65700	56300	47900	40300	33700	27900	22800	18400	14700	
	P					10,80	11,70	12,20	12,50	12,60	12,50	12,10	11,60	10,90	
30	Q				61500	53200	45600	38800	32600	27200	22500	18300	14700		
	P				12,00	12,90	13,60	13,90	14,00	13,90	13,60	13,10	12,30		
t_{ga} °C		TRANSCRITICAL													
30	p_{V2}				75	75	75	75	75	75	75	75	75		
	Q				66800	57500	49200	41800	35200	29400	24300	19900	16000		
	P				12,80	13,70	14,20	14,50	14,60	14,40	14,00	13,40	12,60		
35	p_{V2}				85	85	90	90	90	90	90	90	80		
	Q				57500	49700	44900	38100	32100	26800	22100	17900	9540		
	P				15,50	16,10	17,40	17,30	17,00	16,50	15,70	14,80	13,00		
40	p_{V2}				100	100	100	105	105	105	100	90			
	Q				53500	46200	39600	34700	29200	24200	19300	12600			
	P				19,10	19,30	19,30	19,70	19,10	18,20	16,70	14,80			
45	p_{V2}				110	115	115	115	120	115	100				
	Q				47100	42300	36300	30800	26400	21400	14300				
	P				21,30	22,20	21,80	21,20	20,90	19,20	16,70				
50	p_{V2}				125	130	130	130	130	115	100				
	Q				43500	38700	33200	28100	23500	17400	9220				
	P				24,40	24,90	24,20	23,20	22,00	19,20	16,70				

Subcritical performance data 50 Hz

Relative to 10 K suction gas superheat without liquid subcooling

Transcritical performance data 50 Hz

Relative to 10 K suction gas superheat

The performance data are indicated at a high pressure level, which is close to an optimal high pressure level. Optimal high pressure is thereby related to an ideal cyclic process.

t_c = Condensing temperature

t_{ga} = Gas cooler outlet temperature

p_{V2} = Pressure at the compressor outlet [bar]

Optimal high pressure is outside of the operating limits. Performance data are indicated at minimum or maximum possible high pressure.

CO_2 — Performance data — 50 Hz

Cooling capacity $\dot{Q}_o$ [W] — Power consumption P_e [kW]

Evaporating temperature °C

t_c °C		HGX34/190-4 SH CO_2 T 25	20	15	10	5	HGX34/190-4 ML CO_2 T 0	-5	-10	-15	-20	-25	-30	-35	-40
		SUBCRITICAL													
10	Q									51100	42800	35400	29000	23300	18300
	P									9,79	10,20	10,40	10,30	10,10	9,62
15	Q							65400	55600	46900	39100	32300	26300	21000	16400
	P							9,97	10,70	11,20	11,50	11,50	11,30	10,80	10,20
20	Q						69300	59300	50400	42300	35200	28900	23400	18600	14300
	P						10,90	11,80	12,40	12,70	12,70	12,60	12,20	11,60	10,80
25	Q					75900	61400	52500	44500	37300	30900	25300	20300	16000	
	P					12,80	13,00	13,70	14,00	14,20	14,00	13,70	13,10	12,30	
30	Q				70300	60600	49800	42600	36000	30100	24900	20200	16100		
	P				13,60	14,80	15,20	15,60	15,70	15,70	15,30	14,80	14,00		
t_{ga} °C		TRANSCRITICAL													
30	p_{V2}	90	85	75	75	75	75	75	75	75	75	75	75		
	Q	122000	106000	87600	76000	65400	54000	46000	38900	32500	26800	21800	17300		
	P	14,40	14,40	12,80	14,40	15,60	15,90	16,20	16,30	16,20	15,80	15,10	14,30		
35	p_{V2}	90	85	85	85	85	90	90	90	90	90	85			
	Q	104000	85800	75000	65000	55900	49600	42200	35500	29500	24200	18600			
	P	14,40	14,40	16,00	17,30	18,10	19,50	19,40	19,10	18,60	17,80	16,30			
40	p_{V2}	95	95	100	100	100	100	105	105	105	100	85			
	Q	84000	74300	69600	60000	51400	44000	38600	32300	26700	21200	9290			
	P	16,20	17,80	20,60	21,40	21,90	21,60	22,20	21,60	20,70	19,10	16,30			
45	p_{V2}	110	110	110	110	115	110	110	110	110	100				
	Q	79600	70200	61300	52900	46900	39000	33100	27700	22900	15700				
	P	21,70	22,80	23,60	24,10	25,40	23,60	23,10	22,40	21,40	19,10				
50	p_{V2}	120	120	125	125	130	110	110	110	110	100				
	Q	70300	62100	56700	48900	43100	29800	25300	21300	17600	10100				
	P	25,10	25,90	27,70	27,80	28,50	23,60	23,10	22,40	21,40	19,10				

t_c °C		HGX34/190-4 S CO_2 T													
		SUBCRITICAL													
10	Q									51200	42500	35000	28600	22900	18000
	P									9,88	10,30	10,40	10,40	10,10	9,68
15	Q							66800	56200	47000	39000	32000	26100	20900	16300
	P							10,00	10,80	11,30	11,50	11,50	11,30	10,90	10,30
20	Q						71500	60500	50800	42400	35100	28800	23400	18700	14500
	P						10,90	11,80	12,40	12,70	12,80	12,60	12,20	11,60	10,80
25	Q					74100	63100	53300	44800	37300	30800	25200	20400	16200	
	P					12,10	13,10	13,70	14,10	14,20	14,10	13,70	13,10	12,30	
30	Q				69700	59800	50900	43100	36100	30000	24700	20200	16200		
	P				13,40	14,40	15,20	15,60	15,80	15,70	15,30	14,70	14,00		
t_{ga} °C		TRANSCRITICAL													
30	p_{V2}				75	75	75	75	75	75	75	75	75		
	Q				74800	64300	54900	46500	39200	32700	27000	22000	17600		
	P				14,30	15,30	15,90	16,30	16,40	16,20	15,70	15,10	14,30		
35	p_{V2}				85	85	90	90	90	90	90	90	80		
	Q				564500	55500	50100	42400	35600	29600	24400	19700	10500		
	P				17,30	18,00	19,50	19,40	19,10	18,50	17,80	16,80	14,80		
40	p_{V2}				100	100	100	105	105	105	100	90			
	Q				60100	51700	44100	38500	32200	26700	21300	13800			
	P				21,30	21,60	21,50	22,10	21,50	20,60	18,90	16,80			
45	p_{V2}				110	115	115	115	120	115	100				
	Q				53000	47300	40400	34100	29100	23600	15800				
	P				23,70	24,80	24,40	23,80	23,60	21,80	18,90				
50	p_{V2}				125	130	130	130	130	115	100				
	Q				48800	43100	36700	31000	25900	19100	10200				
	P				27,00	27,70	27,00	26,10	25,00	21,80	18,90				

Subcritical performance data 50 Hz

Relative to 10 K suction gas superheat without liquid subcooling

Transcritical performance data 50 Hz

Relative to 10 K suction gas superheat

The performance data are indicated at a high pressure level, which is close to an optimal high pressure level. Optimal high pressure is thereby related to an ideal cyclic process.

t_c = Condensing temperature

t_{ga} = Gas cooler outlet temperature

p_{V2} = Pressure at the compressor outlet [bar]

Optimal high pressure is outside of the operating limits. Performance data are indicated at minimum or maximum possible high pressure.

CO_2 Performance data 50 Hz

Cooling capacity $\dot{Q}_o$ [W] — Power consumption P_e [kW]

Evaporating temperature °C

t_c °C		HGX34/210-4 SH CO_2 T 25	20	15	10	5	HGX34/210-4 ML CO_2 T 0	-5	-10	-15	-20	-25	-30	-35	-40
SUBCRITICAL															
10	Q									57900	48400	40100	32700	26300	20600
	P									10,90	11,30	11,60	11,50	11,20	10,60
15	Q							74000	62900	53000	44200	36400	29600	23600	18400
	P							11,10	11,90	12,50	12,80	12,80	12,60	12,00	11,30
20	Q						78200	67000	56800	47800	39700	32600	26400	20900	16100
	P						12,30	13,20	13,80	14,10	14,20	14,10	13,60	12,90	11,90
25	Q					84500	69100	59100	50100	42000	34900	28500	22900	18000	
	P					14,30	14,60	15,30	15,70	15,80	15,70	15,30	14,60	13,60	
30	Q				78200	67400	56000	47900	40500	33900	28100	22900	18300		
	P				15,10	16,60	17,00	17,50	17,60	17,50	17,10	16,50	15,50		
t_{ga} °C		TRANSCRITICAL													
30	p_{V2}	90	85	75	75	75	75	75	75	75	75	75	75		
	Q	135000	118000	97500	84500	72700	60600	51800	43800	36600	30300	24600	19700		
	P	16,00	16,10	14,30	16,10	17,40	17,90	18,20	18,30	18,10	17,60	16,90	15,80		
35	p_{V2}	90	85	85	85	85	90	90	90	90	90	85			
	Q	116000	95400	83400	72200	62000	55700	47400	40000	33300	27400	21100			
	P	16,00	16,10	17,90	19,30	20,30	22,00	21,90	21,50	20,80	19,80	18,10			
40	p_{V2}	95	95	100	100	100	100	105	105	105	100	85			
	Q	93400	82600	77100	66500	56900	49300	43400	36600	30400	24200	10600			
	P	18,10	19,90	23,10	24,00	24,50	24,50	25,00	24,20	23,00	21,00	18,10			
45	p_{V2}	110	110	110	110	115	110	110	110	110	100				
	Q	88300	77900	67800	58500	51900	43800	37300	31500	26200	17900				
	P	24,30	25,50	26,40	27,00	28,50	26,70	26,00	25,00	23,60	21,00				
50	p_{V2}	120	120	125	125	130	110	110	110	110	100				
	Q	77900	68800	62700	54000	47500	33500	28600	24100	20100	11600				
	P	28,20	29,10	31,10	31,20	32,00	26,70	26,00	25,00	23,60	21,00				

HGX34/210-4 S CO_2 T

t_c °C															
SUBCRITICAL															
10	Q									58400	48800	40400	33000	26600	20900
	P									10,90	11,40	11,60	11,50	11,20	10,70
15	Q							74700	63500	53500	44600	36800	29900	23900	18600
	P							11,20	12,00	12,60	12,80	12,80	12,50	12,00	11,30
20	Q						79100	67700	57400	48200	40100	32900	26600	21100	16200
	P						12,30	13,20	13,90	14,20	14,20	14,00	13,60	12,90	12,00
25	Q					81200	69900	59700	50600	42400	35100	28700	23100	18100	
	P					13,60	14,60	15,30	15,70	15,80	15,60	15,20	14,50	13,60	
30	Q				75700	65800	56700	48400	40900	34200	28200	23000	18300		
	P				15,10	16,20	17,00	17,50	17,60	17,50	17,10	16,40	15,50		
t_{ga} °C		TRANSCRITICAL													
30	p_{V2}				75	75	75	75	75	75	75	75	75		
	Q				82300	71300	61300	52300	44100	36900	30400	24700	19700		
	P				16,10	17,20	17,80	18,20	18,30	18,00	17,50	16,80	15,80		
35	p_{V2}				85	85	90	90	90	90	90	90	80		
	Q				71400	61900	56200	47800	40200	33400	27400	22100	11700		
	P				19,50	20,20	21,80	21,70	21,30	20,70	19,70	18,50	16,30		
40	p_{V2}				100	100	100	105	105	105	100	90			
	Q				67000	58000	49700	43600	36600	30300	24000	15500			
	P				24,00	24,30	24,20	24,80	24,00	22,90	20,90	18,50			
45	p_{V2}				110	115	115	115	120	115	100				
	Q				59400	53500	45800	38800	33300	26900	17800				
	P				26,70	27,90	27,40	26,60	26,20	24,10	20,90				
50	p_{V2}				125	130	130	130	130	115	100				
	Q				55200	49200	42100	35700	29800	21800	11500				
	P				30,60	31,20	30,30	29,10	27,60	24,10	20,90				

Subcritical performance data 50 Hz

Relative to 10 K suction gas superheat without liquid subcooling

Transcritical performance data 50 Hz

Relative to 10 K suction gas superheat

The performance data are indicated at a high pressure level, which is close to an optimal high pressure level. Optimal high pressure is thereby related to an ideal cyclic process.

t_c = Condensing temperature

t_{ga} = Gas cooler outlet temperature

p_{V2} = Pressure at the compressor outlet [bar]

Optimal high pressure is outside of the operating limits. Performance data are indicated at minimum or maximum possible high pressure.

CO_2 Performance data 50 Hz

Cooling capacity $\dot{Q}_o$ [W] — Power consumption P_e [kW]

Evaporating temperature °C

t_c °C		HGX34/230-4 SH CO_2 T 25	20	15	10	5	HGX34/230-4 ML CO_2 T 0	-5	-10	-15	-20	-25	-30	-35	-40
		SUBCRITICAL													
10	Q									64000	53600	44400	36300	29200	23000
	P									12,10	12,70	12,90	12,80	12,30	11,60
15	Q							81700	69500	58600	49000	40400	32900	26300	20600
	P							12,40	13,30	14,00	14,30	14,30	13,90	13,30	12,30
20	Q						86500	74100	62900	53000	44100	36300	29400	23400	18100
	P						13,70	14,70	15,40	15,80	15,80	15,60	15,00	14,20	13,00
25	Q					94200	76500	65500	55500	46600	38700	31700	25600	20200	
	P					15,90	16,20	17,00	17,40	17,50	17,40	16,90	16,10	14,90	
30	Q				87200	74900	62100	53100	45000	37700	31200	25500	20400		
	P				16,80	18,40	18,80	19,30	19,40	19,30	18,80	18,00	17,00		
t_{ga} °C		TRANSCRITICAL													
30	p_{V2}	90	85	75	75	75	75	75	75	75	75	75	75		
	Q	150000	131000	109000	94100	80700	67200	57400	48600	40700	33700	27500	22000		
	P	17,80	17,90	15,90	17,90	19,40	19,80	20,10	20,10	19,90	19,30	18,40	17,30		
35	p_{V2}	90	85	85	85	85	90	90	90	90	90	85			
	Q	128000	106000	92500	80000	68700	61800	52700	44500	37100	30600	23600			
	P	17,80	17,90	19,90	21,40	22,50	24,20	23,90	23,40	22,60	21,60	19,60			
40	p_{V2}	95	95	100	100	100	100	105	105	105	100	85			
	Q	104000	91200	85100	73500	63100	54800	48300	40700	33900	27000	11800			
	P	20,20	22,20	25,60	26,60	27,20	26,90	27,50	26,50	25,20	22,90	19,60			
45	p_{V2}	110	110	110	110	115	110	110	110	110	100				
	Q	97500	85900	74900	64700	57700	48800	41600	35000	29200	20000				
	P	26,90	28,30	29,30	29,90	31,50	29,60	28,70	27,50	26,00	22,90				
50	p_{V2}	120	120	125	125	130	110	110	110	110	100				
	Q	86300	76200	69800	60100	53200	37200	31800	26800	22400	12900				
	P	31,10	32,10	34,40	34,40	35,30	29,60	28,70	27,50	26,00	22,90				

t_c °C		HGX34/230-4 S CO_2 T													
		SUBCRITICAL													
10	Q									63900	53500	44400	36300	29300	23100
	P									12,20	12,60	12,80	12,70	12,30	11,60
15	Q							81700	69500	58600	49000	40500	33000	26400	20600
	P							12,50	13,40	14,00	14,30	14,20	13,90	13,30	12,40
20	Q						86700	74200	63000	53000	44200	36300	29400	23400	18100
	P						13,80	14,90	15,50	15,90	15,90	15,60	15,00	14,20	13,10
25	Q					89200	76900	65700	55700	46700	38800	31800	25600	20200	
	P					15,30	16,40	17,20	17,60	17,70	17,50	16,90	16,10	15,00	
30	Q				83300	72500	62500	53400	45200	37800	31300	25500	20400		
	P				17,00	18,20	19,10	19,60	19,70	19,50	19,00	18,20	17,10		
t_{ga} °C		TRANSCRITICAL													
30	p_{V2}				75	75	75	75	75	75	75	75	75		
	Q				90700	78600	67600	57700	48800	40800	33700	27500	21900		
	P				18,10	19,30	20,00	20,40	20,40	20,10	19,50	18,60	17,40		
35	p_{V2}				85	85	90	90	90	90	90	90	80		
	Q				78900	68400	62300	53000	44600	37200	30500	24700	13100		
	P				21,80	22,60	24,40	24,20	23,70	22,90	21,80	20,40	17,90		
40	p_{V2}				100	100	100	105	105	105	100	90			
	Q				74400	64400	55300	48600	40800	33800	26800	17300			
	P				26,80	27,10	26,90	27,50	26,50	25,30	23,10	20,40			
45	p_{V2}				110	115	115	115	120	115	100				
	Q				66100	59700	51200	43400	37300	30100	19900				
	P				29,80	31,00	30,40	29,50	29,10	26,70	23,10				
50	p_{V2}				125	130	130	130	130	115	100				
	Q				61700	55100	47200	40000	33400	24400	12900				
	P				34,10	34,80	33,80	32,40	30,80	26,70	23,10				

Subcritical performance data 50 Hz

Relative to 10 K suction gas superheat without liquid subcooling

Transcritical performance data 50 Hz

Relative to 10 K suction gas superheat

The performance data are indicated at a high pressure level, which is close to an optimal high pressure level. Optimal high pressure is thereby related to an ideal cyclic process.

t_c = Condensing temperature

t_{ga} = Gas cooler outlet temperature

p_{V2} = Pressure at the compressor outlet [bar]

Optimal high pressure is outside of the operating limits. Performance data are indicated at minimum or maximum possible high pressure.

96219-05.2013-Gb Subject to change without notice

CO_2 — Performance data — 50 Hz

Cooling capacity $\dot{Q}_o$ [W] — Power consumption P_e [kW]

Evaporating temperature °C

t_c °C		HGX46/250-4 SH CO_2 T 25	20	15	10	5	HGX46/250-4 ML CO_2 T 0	-5	-10	-15	-20	-25	-30	-35	-40
		SUBCRITICAL													
10	Q									69100	57400	47100	38300	30600	23900
	P									13,00	13,50	13,80	13,70	13,40	12,70
15	Q							89800	75800	63400	52500	43100	34900	27800	21600
	P							13,30	14,30	15,00	15,30	15,30	15,00	14,50	13,60
20	Q						95700	81400	68600	57300	47400	38800	31300	24900	19200
	P						14,80	15,80	16,60	17,00	17,10	16,80	16,30	15,50	14,50
25	Q					98900	84600	71900	60600	50600	41800	34100	27500	21700	
	P					16,30	17,60	18,40	18,80	19,00	18,80	18,30	17,60	16,60	
30	Q				93500	80200	68500	58300	49100	41000	33900	27600	22200		
	P				17,90	19,30	20,50	21,00	21,20	21,00	20,60	19,80	18,80		
t_{ga} °C		TRANSCRITICAL													
30	p_{V2}	90	85	75	75	75	75	75	75	75	75	75	75		
	Q	165000	143000	118000	102000	86900	74200	63000	53100	44300	36500	29800	24000		
	P	18,80	19,30	17,10	19,00	20,40	21,50	21,90	21,90	21,70	21,20	20,30	19,20		
35	p_{V2}	90	85	85	85	85	90	90	90	90	90	85			
	Q	141000	117000	102000	87900	75300	67900	57600	48400	40200	33100	25600			
	P	18,80	19,30	21,50	23,00	24,00	26,40	26,20	25,70	25,00	23,90	21,90			
40	p_{V2}	95	95	100	100	100	100	105	105	105	100	85			
	Q	115000	102000	95100	82200	70300	60000	52400	43900	36500	29100	12900			
	P	21,30	23,90	27,70	28,60	29,00	29,30	30,00	29,00	27,80	25,50	21,90			
45	p_{V2}	110	110	110	110	115	110	110	110	110	100				
	Q	109000	95900	83900	72500	64400	53100	45000	37700	31300	21600				
	P	28,50	30,40	31,60	32,10	33,60	32,00	31,20	30,10	28,70	25,50				
50	p_{V2}	120	120	125	125	130	110	110	110	110	100				
	Q	95100	84600	77300	66800	58500	40500	34400	28900	24000	13900				
	P	33,00	34,50	37,10	37,00	37,80	32,00	31,20	30,10	28,70	25,50				

t_c °C		HGX46/250-4 S CO_2 T													
		SUBCRITICAL													
10	Q									69200	57500	47300	38400	30700	24000
	P									13,20	13,70	13,90	13,80	13,50	12,90
15	Q							90100	76000	63600	52700	43200	35000	27900	21600
	P							13,50	14,50	15,10	15,40	15,40	15,10	14,50	13,80
20	Q						96200	81700	68800	57500	47600	39000	31500	25000	19300
	P						14,70	15,90	16,60	17,00	17,10	16,80	16,30	15,60	14,60
25	Q					99400	85100	72200	60800	50800	42000	34300	27600	21800	
	P					16,20	17,50	18,40	18,90	19,00	18,80	18,30	17,60	16,60	
30	Q				93100	80500	68900	58500	49300	41100	33900	27700	22200		
	P				17,90	19,30	20,30	20,90	21,10	21,00	20,50	19,80	18,80		
t_{ga} °C		TRANSCRITICAL													
30	p_{V2}				75	75	75	75	75	75	75	75	75		
	Q				102000	87200	74600	63300	53200	44400	36700	30000	24100		
	P				19,10	20,40	21,30	21,80	21,90	21,70	21,10	20,30	19,20		
35	p_{V2}				85	85	90	90	90	90	90	90	80		
	Q				87700	75600	68300	57800	48600	40400	33300	27100	14500		
	P				23,20	24,10	26,20	26,10	25,70	24,90	23,90	22,50	19,80		
40	p_{V2}				100	100	100	105	105	105	100	90			
	Q				82100	70600	60300	52700	44100	36600	29200	19000			
	P				28,80	29,10	29,10	29,90	28,90	27,70	25,40	22,50			
45	p_{V2}				110	115	115	115	120	115	100				
	Q				72600	65000	55400	46800	40100	32500	21700				
	P				32,20	33,60	33,10	32,10	31,70	29,20	25,40				
50	p_{V2}				125	130	130	130	130	115	100				
	Q				67200	59500	50700	42700	35700	26300	14000				
	P				36,90	37,70	36,60	35,10	33,30	29,20	25,40				

Subcritical performance data 50 Hz

Relative to 10 K suction gas superheat without liquid subcooling

Transcritical performance data 50 Hz

Relative to 10 K suction gas superheat

The performance data are indicated at a high pressure level, which is close to an optimal high pressure level. Optimal high pressure is thereby related to an ideal cyclic process.

t_c = Condensing temperature

t_{ga} = Gas cooler outlet temperature

p_{V2} = Pressure at the compressor outlet [bar]

Optimal high pressure is outside of the operating limits. Performance data are indicated at minimum or maximum possible high pressure.

CO_2 — Performance data — 50 Hz

Cooling capacity $\dot{Q}_o$ [W] — Power consumption P_e [kW]

Evaporating temperature °C

t_c °C		HGX46/280-4 SH CO_2 T 25	20	15	10	5	HGX46/280-4 ML CO_2 T 0	-5	-10	-15	-20	-25	-30	-35	-40
		SUBCRITICAL													
10	Q									77400	64200	52800	42900	34300	26900
	P									14,50	15,10	15,40	15,30	14,90	14,20
15	Q							101000	84800	71000	58800	48300	39100	31200	24300
	P							14,90	16,00	16,70	17,10	17,10	16,80	16,20	15,20
20	Q						107000	91000	76700	64200	53200	43500	35200	27900	21600
	P						16,50	17,70	18,50	19,00	19,10	18,80	18,30	17,40	16,20
25	Q					111000	94500	80400	67800	56600	46800	38300	30900	24400	
	P					18,20	19,70	20,60	21,10	21,30	21,10	20,50	19,70	18,50	
30	Q				105000	89900	76600	65200	55000	45900	37900	31000	24900		
	P				20,00	21,60	23,00	23,50	23,70	23,50	23,00	22,20	21,10		
t_{ga} °C		TRANSCRITICAL													
30	p_{V2}	90	85	75	75	75	75	75	75	75	75	75	75		
	Q	185000	161000	133000	114000	97500	82900	70500	59400	49600	41000	33500	26900		
	P	21,00	21,60	19,20	21,30	22,70	24,10	24,50	24,60	24,30	23,70	22,80	21,50		
35	p_{V2}	90	85	85	85	85	90	90	90	90	90	85			
	Q	158000	131000	115000	98800	84500	75900	64400	54100	45100	37100	28800			
	P	21,00	21,60	24,00	25,70	26,70	29,60	29,40	28,90	28,00	26,80	24,60			
40	p_{V2}	95	95	100	100	100	100	105	105	105	100	85			
	Q	129000	114000	107000	92300	79000	67000	58600	49200	40900	32600	14400			
	P	23,80	26,70	30,90	31,90	32,30	32,90	33,70	32,60	31,20	28,60	24,60			
45	p_{V2}	110	110	110	110	115	110	110	110	110	100				
	Q	122000	108000	94200	81500	72500	59400	50300	42200	35000	24200				
	P	31,70	33,90	35,20	35,80	37,40	35,90	35,00	33,70	32,20	28,60				
50	p_{V2}	120	120	125	125	130	110	110	110	110	100				
	Q	107000	94900	86800	75100	66000	45300	38500	32300	26900	15600				
	P	36,80	38,50	41,30	41,30	42,20	35,90	35,00	33,70	32,20	28,60				

t_c °C		HGX46/280-4 S CO_2 T													
		SUBCRITICAL													
10	Q									77600	64900	53700	43900	35300	27700
	P									14,60	15,40	15,70	15,60	15,20	14,60
15	Q							99500	84600	71200	59400	49000	39800	31800	24700
	P							14,60	16,00	16,90	17,30	17,30	17,00	16,30	15,40
20	Q						106000	90400	76700	64400	53600	44000	35600	28200	21700
	P						16,00	17,60	18,60	19,10	19,20	19,00	18,30	17,40	16,20
25	Q					109000	93700	80000	67800	56800	47100	38500	30900	24300	
	P					17,60	19,40	20,50	21,20	21,40	21,10	20,50	19,60	18,40	
30	Q				102000	88500	76200	65000	55000	46000	37900	30900	24600		
	P				19,60	21,50	22,80	23,50	23,80	23,60	23,00	22,00	20,80		
t_{ga} °C		TRANSCRITICAL													
30	p_{V2}				75	75	75	75	75	75	75	75	75		
	Q				111000	96000	82500	70300	59400	49600	40900	33300	26500		
	P				21,10	22,80	23,90	24,50	24,70	24,30	23,60	22,60	21,20		
35	p_{V2}				85	85	90	90	90	90	90	90	80		
	Q				96500	83600	76100	64700	54400	45300	37100	29900	15800		
	P				25,90	27,10	29,50	29,40	28,80	27,80	26,50	24,90	21,90		
40	p_{V2}				100	100	100	105	105	105	100	90			
	Q				91000	78800	67600	59400	49800	41200	32600	21000			
	P				32,30	32,80	32,70	33,50	32,30	30,80	28,20	24,90			
45	p_{V2}				110	115	115	115	120	115	100				
	Q				81000	73200	62700	53100	45600	36800	24200				
	P				36,20	37,80	37,10	36,00	35,60	32,70	28,20				
50	p_{V2}				125	130	130	130	130	115	100				
	Q				75800	67700	58000	49100	41000	29800	15600				
	P				41,50	42,40	41,20	39,70	37,70	32,70	28,20				

Subcritical performance data 50 Hz

Relative to 10 K suction gas superheat without liquid subcooling

Transcritical performance data 50 Hz

Relative to 10 K suction gas superheat

The performance data are indicated at a high pressure level, which is close to an optimal high pressure level. Optimal high pressure is thereby related to an ideal cyclic process.

t_c = Condensing temperature

t_{ga} = Gas cooler outlet temperature

p_{V2} = Pressure at the compressor outlet [bar]

Optimal high pressure is outside of the operating limits. Performance data are indicated at minimum or maximum possible high pressure.

96219-05.2013-Gb Subject to change without notice

CO_2 — Performance data — 50 Hz

Cooling capacity $\dot{Q}_o$ [W] — Power consumption P_e [kW]

Evaporating temperature °C

t_c °C		HGX46/310-4 SH CO_2 T 25	20	15	10	5	HGX46/310-4 ML CO_2 T 0	-5	-10	-15	-20	-25	-30	-35	-40
		SUBCRITICAL													
10	Q									85800	71200	58500	47500	37900	29700
	P									16,20	16,90	17,20	17,10	16,60	15,80
15	Q							112000	94100	78700	65200	53400	43200	34400	26800
	P							16,60	17,80	18,70	19,10	19,10	18,70	18,00	17,00
20	Q						119000	101000	85100	71100	58800	48100	38800	30800	23800
	P						18,40	19,80	20,70	21,20	21,30	21,00	20,40	19,40	18,00
25	Q					124000	105000	89100	75000	62600	51800	42300	34000	26900	
	P					20,20	22,00	23,00	23,50	23,70	23,50	22,90	22,00	20,70	
30	Q				117000	99900	84800	72100	60800	50700	41900	34100	27400		
	P				22,20	24,00	25,60	26,20	26,40	26,30	25,70	24,80	23,50		
t_{ga} °C		TRANSCRITICAL													
30	p_{V2}	90	85	75	75	75	75	75	75	75	75	75	75		
	Q	205000	179000	147000	127000	109000	91800	78000	65700	54800	45200	36900	29600		
	P	23,40	24,00	21,30	23,70	25,30	26,90	27,40	27,40	27,10	26,50	25,40	24,00		
35	p_{V2}	90	85	85	85	85	90	90	90	90	90	85			
	Q	175000	146000	127000	110000	93600	83900	71100	59700	49700	40900	31600			
	P	23,40	24,00	26,80	28,60	29,80	33,10	32,90	32,30	31,30	30,00	27,40			
40	p_{V2}	95	95	100	100	100	100	105	105	105	100	85			
	Q	142000	127000	119000	103000	87100	74000	64600	54100	44900	35900	15900			
	P	26,50	29,70	34,50	35,70	36,10	36,80	37,70	36,40	34,90	32,00	27,40			
45	p_{V2}	110	110	110	110	115	110	110	110	110	100				
	Q	135000	120000	105000	90100	79600	65400	55300	46400	38500	26600				
	P	35,50	37,90	39,40	40,10	42,00	40,30	39,20	37,70	36,00	32,00				
50	p_{V2}	120	120	125	125	130	110	110	110	100					
	Q	118000	106000	96100	82800	72200	49900	42300	35500	29500	17200				
	P	41,20	43,10	46,40	46,30	47,30	40,30	39,20	37,70	36,00	32,00				

HGX46/310-4 S CO_2 T

t_c °C															
		SUBCRITICAL													
10	Q									86000	71400	58700	47600	38100	29800
	P									16,30	16,90	17,20	17,10	16,60	15,90
15	Q							112000	94300	78900	65400	53600	43400	34600	26900
	P							16,60	17,90	18,70	19,00	19,00	18,60	18,00	17,00
20	Q						120000	102000	85400	71300	59000	48300	39000	30900	23900
	P						18,20	19,70	20,60	21,10	21,20	20,90	20,20	19,30	18,10
25	Q					124000	106000	89500	75300	62900	52000	42500	34200	27000	
	P					20,00	21,70	22,80	23,40	23,60	23,40	22,80	21,80	20,60	
30	Q				116000	99800	85500	72600	61100	50900	42100	34300	27600		
	P				122,20	24,00	25,30	26,10	26,30	26,20	25,60	24,60	23,30		
t_{ga} °C		TRANSCRITICAL													
30	p_{V2}				75	75	75	75	75	75	75	75	75		
	Q				126000	109000	92400	78400	65900	55000	45400	37100	29800		
	P				23,80	25,50	26,60	27,20	27,30	27,00	26,30	25,20	23,80		
35	p_{V2}				85	85	90	90	90	90	90	90	80		
	Q				109000	93500	84400	71500	60000	49900	41100	33500	17900		
	P				28,90	30,20	32,80	32,70	32,20	31,20	29,80	28,10	24,70		
40	p_{V2}				100	100	100	105	105	105	100	90			
	Q				102000	87200	74400	64900	54400	45200	36100	23500			
	P				36,10	36,60	36,50	37,50	36,30	34,70	31,80	28,10			
45	p_{V2}				110	115	115	115	120	115	100				
	Q				89500	80000	68200	57600	49300	40000	26800				
	P				40,50	42,40	41,60	40,40	39,90	36,70	31,80				
50	p_{V2}				125	130	130	130	130	115	100				
	Q				82600	73100	62200	52500	43900	32400	17300				
	P				46,60	47,60	46,20	44,30	42,00	36,70	31,80				

Subcritical performance data 50 Hz

Relative to 10 K suction gas superheat without liquid subcooling

Transcritical performance data 50 Hz

Relative to 10 K suction gas superheat

The performance data are indicated at a high pressure level, which is close to an optimal high pressure level. Optimal high pressure is thereby related to an ideal cyclic process.

t_c = Condensing temperature

t_{ga} = Gas cooler outlet temperature

p_{V2} = Pressure at the compressor outlet [bar]

Optimal high pressure is outside of the operating limits. Performance data are indicated at minimum or maximum possible high pressure.

CO_2 — Performance data — 50 Hz

Cooling capacity $\dot{Q}_o$ [W] — Power consumption P_e [kW]

Evaporating temperature °C

t_c °C		HGX46/345-4 SH CO_2 T 25	20	15	10	5	HGX46/345-4 ML CO_2 T 0	-5	-10	-15	-20	-25	-30	-35	-40
		SUBCRITICAL													
10	Q									95200	79000	64900	52700	42200	33100
	P									18,00	18,70	19,00	18,90	18,40	17,60
15	Q							124000	105000	87300	72300	59300	48000	38300	29900
	P							18,50	19,70	20,60	21,00	21,00	20,70	19,90	18,80
20	Q						132000	112000	94300	78800	65300	53400	43100	34200	26600
	P						20,40	21,80	22,80	23,30	23,40	23,10	22,50	21,40	20,00
25	Q					138000	117000	98700	83200	69500	57500	47000	37800	29900	
	P					22,70	24,20	25,30	25,90	26,10	25,90	25,30	24,30	22,90	
30	Q				130000	111000	93900	79900	67400	56300	46500	38000	30500		
	P				24,90	26,80	28,30	28,90	29,20	29,00	28,40	27,40	26,00		
t_{ga} °C		TRANSCRITICAL													
30	p_{V2}	90	85	75	75	75	75	75	75	75	75	75	75		
	Q	227000	198000	164000	141000	121000	102000	86400	72800	60800	50200	41000	32900		
	P	26,20	26,90	23,90	26,50	28,30	29,70	30,20	30,30	30,00	29,30	28,10	26,60		
35	p_{V2}	90	85	85	85	85	90	90	90	90	90	85			
	Q	194000	162000	142000	122000	105000	92800	78700	66200	55100	45400	35200			
	P	26,20	26,90	29,90	32,00	33,30	36,60	36,40	35,80	34,70	33,30	30,40			
40	p_{V2}	95	95	100	100	100	100	105	105	105	100	85			
	Q	158000	141000	133000	114000	97100	81800	71500	59900	49800	39900	17700			
	P	29,60	33,20	38,50	39,80	40,30	40,80	41,80	40,40	38,60	35,50	30,40			
45	p_{V2}	110	110	110	110	115	110	110	110	110	100				
	Q	150000	133000	117000	101000	88900	72300	61200	51400	42700	29600				
	P	39,50	42,30	43,90	44,60	46,70	44,60	43,40	41,80	39,70	35,50				
50	p_{V2}	120	120	125	125	130	110	110	110	110	100				
	Q	132000	118000	108000	92500	80800	55100	46800	39400	32700	19100				
	P	45,90	48,00	51,60	51,50	52,60	44,60	43,40	41,80	39,70	35,50				

t_c °C		HGX46/345-4 S CO_2 T													
		SUBCRITICAL													
10	Q									96200	80600	66700	54500	43800	34400
	P									18,40	19,10	19,30	19,10	18,60	17,90
15	Q							124000	105000	88200	73600	60700	49400	39400	30700
	P							18,80	20,20	21,10	21,40	21,30	20,90	20,10	19,10
20	Q						131000	112000	94800	79700	66200	54400	44000	34900	26900
	P						20,60	22,30	23,30	23,80	23,80	23,40	22,60	21,60	20,30
25	Q					135000	116000	98700	83600	70100	58100	47500	38200	30000	
	P					22,70	24,60	25,80	26,40	26,50	26,20	25,40	24,30	23,00	
30	Q				126000	109000	93800	80100	67700	56600	46800	38100	30400		
	P				25,20	27,20	28,60	29,40	29,60	29,30	28,50	27,40	26,00		
t_{ga} °C		TRANSCRITICAL													
30	p_{V2}				75	75	75	75	75	75	75	75	75		
	Q				136000	118000	102000	86400	73000	61000	50400	41000	32700		
	P				26,90	28,80	30,00	30,60	30,70	30,20	29,40	28,10	26,60		
35	p_{V2}				85	85	90	90	90	90	90	90	80		
	Q				119000	103000	93300	79300	66800	55600	45700	36800	19500		
	P				32,70	34,00	36,80	36,60	35,90	34,70	33,20	31,30	27,50		
40	p_{V2}				100	100	100	105	105	105	100	90			
	Q				112000	96200	82600	72500	60900	50500	40100	25800			
	P				40,50	40,90	40,80	41,70	40,40	38,50	35,40	31,30			
45	p_{V2}				110	115	115	115	120	115	100				
	Q				98600	89000	76300	64800	55800	45000	29700				
	P				45,20	47,10	46,30	44,90	44,40	40,90	35,40				
50	p_{V2}				125	130	130	130	130	115	100				
	Q				91900	82200	70500	59800	50200	36500	19200				
	P				51,80	52,90	51,30	49,30	46,90	40,90	35,40				

Subcritical performance data 50 Hz

Relative to 10 K suction gas superheat without liquid subcooling

Transcritical performance data 50 Hz

Relative to 10 K suction gas superheat

The performance data are indicated at a high pressure level, which is close to an optimal high pressure level. Optimal high pressure is thereby related to an ideal cyclic process.

t_c = Condensing temperature

t_{ga} = Gas cooler outlet temperature

p_{V2} = Pressure at the compressor outlet [bar]

Optimal high pressure is outside of the operating limits. Performance data are indicated at minimum or maximum possible high pressure.

96219-05.2013-Gb Subject to change without notice

CO_2 Type	Number of cylinders	Displacement 50 / 60 Hz (1450 / 1740 rpm)	Electrical data				Weight	Connections ④		Oil charge
			Voltage ①	Max. working current ②	Max. power consumption ②	Starting current (rotor locked) ②		Discharge line DV	Suction line SV ⑤	
		m³/h		A	kW	A	kg	mm	mm	Ltr.
				* PW 1+2		*PW1 / PW 1+2				
HGX2/70-4 CO_2 T	2	6,20 / 7,40	③	18,4	10,9	57 / 75	145	18	22	2,5
HAX2/70-4 CO_2 T	2	6,20 / 7,40	③	16,2	9,6	57 / 75	149	18	22	2,5
HGX2/90-4 CO_2 T	2	7,70 / 9,30	③	23,6	13,9	82 / 107	160	18	22	2,5
HAX2/90-4 CO_2 T	2	7,70 / 9,30	③	21,2	12,4	82 / 107	160	18	22	2,5
HGX2/110-4 CO_2 T	2	9,70 / 11,60	③	30,9	17,6	110 / 141	160	18	22	2,5
HAX2/110-4 CO_2 T	2	9,70 / 11,60	③	27,8	15,6	110 / 141	163	18	22	2,5

* PW = Part Winding, motors for part winding start 1 = 1. part winding 2 = 2. part winding

Explanations:

① Tolerance (± 10%) relates to the mean value of the voltage range. Other voltages and current types on request.

② - The specifications for max. power consumption apply for 50 Hz operation. For 60 Hz operation, the specifications have to be multiplied by the factor 1.2.
The max. working current remains unchanged.
- Take account of the max. operating current / max. power consumption when designing contactors, leads and fuses.
Switches: Service category AC3

③ 380-420 V Y/YY - 3 - 50 Hz PW
440-480 V Y/YY - 3 - 60 Hz PW
PW = Part Winding, motors for part winding start
(no start unloaders required)
- Winding ratios: 66% / 33%
- Designs for Y/Δ on request

④ Compression joint for steel pipes

⑤ For soldering connections

CO_2 Type	Number of cylinders	Displacement 50 / 60 Hz (1450 / 1740 rpm)	Electrical data				Weight	Connections ④		Oil charge
			Voltage ①	Max. working current ②	Max. power consumption ②	Starting current (rotor locked) ②		Discharge line DV ④	Suction line SV ⑤	
		m³/h		A	kW	A	kg	mm I inch	mm I inch	Ltr.
				* PW 1+2		*PW1 / PW 1+2				
HGX34/110-4 ML CO_2 T	4	9,90 / 11,80	③	24,6	14,4	115 / 150	194	22 I 7/8	28 I 1 1/8	2,5
HGX34/110-4 S CO_2 T	4	9,90 / 11,80	③	28,6	17,2	133 / 171	197	22 I 7/8	28 I 1 1/8	2,5
HGX34/110-4 SH CO_2 T	4	9,90 / 11,80	③	29,4	17,7	133 / 171	197	22 I 7/8	28 I 1 1/8	2,5
HGX34/130-4 ML CO_2 T	4	11,30 / 13,60	③	28,0	16,6	115 / 150	194	22 I 7/8	28 I 1 1/8	2,5
HGX34/130-4 S CO_2 T	4	11,30 / 13,60	③	32,6	19,7	133 / 171	197	22 I 7/8	28 I 1 1/8	2,5
HGX34/130-4 SH CO_2 T	4	11,30 / 13,60	③	33,5	20,3	133 / 171	197	22 I 7/8	28 I 1 1/8	2,5
HGX34/150-4 ML CO_2 T	4	12,90 / 15,40	③	31,1	18,8	133 / 171	197	22 I 7/8	28 I 1 1/8	2,5
HGX34/150-4 S CO_2 T	4	12,90 / 15,40	③	37,7	22,4	162 / 210	200	22 I 7/8	28 I 1 1/8	2,5
HGX34/150-4 SH CO_2 T	4	12,90 / 15,40	③	38,7	23,1	162 / 210	200	22 I 7/8	28 I 1 1/8	2,5
HGX34/170-4 ML CO_2 T	4	14,50 / 17,40	③	35,2	21,3	133 / 171	196	22 I 7/8	28 I 1 1/8	2,5
HGX34/170-4 S CO_2 T	4	14,50 / 17,40	③	42,2	25,3	162 / 210	209	22 I 7/8	28 I 1 1/8	2,5
HGX34/170-4 SH CO_2 T	4	14,50 / 17,40	③	43,4	26,0	162 / 210	209	22 I 7/8	28 I 1 1/8	2,5
HGX34/190-4 ML CO_2 T	4	16,30 / 19,60	③	39,5	23,6	162 / 210	200	22 I 7/8	28 I 1 1/8	2,5
HGX34/190-4 S CO_2 T	4	16,30 / 19,60	③	47,1	28,1	189 / 246	209	22 I 7/8	28 I 1 1/8	2,5
HGX34/190-4 SH CO_2 T	4	16,30 / 19,60	③	48,5	29,0	189 / 246	209	22 I 7/8	28 I 1 1/8	2,5
HGX34/210-4 ML CO_2 T	4	18,20 / 21,80	③	44,5	26,7	162 / 210	200	22 I 7/8	28 I 1 1/8	2,5
HGX34/210-4 S CO_2 T	4	18,20 / 21,80	③	52,9	31,8	189 / 246	215	22 I 7/8	28 I 1 1/8	2,5
HGX34/210-4 SH CO_2 T	4	18,20 / 21,80	③	54,2	32,6	189 / 246	215	22 I 7/8	28 I 1 1/8	2,5
HGX34/230-4 ML CO_2 T	4	20,10 / 24,10	③	49,4	29,6	189 / 246	209	22 I 7/8	28 I 1 1/8	2,5
HGX34/230-4 S CO_2 T	4	20,10 / 24,10	③	59,3	35,5	231 / 283	222	22 I 7/8	28 I 1 1/8	2,5
HGX34/230-4 SH CO_2 T	4	20,10 / 24,10	③	59,9	35,9	231 / 283	222	22 I 7/8	28 I 1 1/8	2,5
HGX46/250-4 ML CO_2 T	6	21,80 / 26,20	③	53,8	32,0	231 / 283	239	22 I 7/8	28 I 1 1/8	2,5
HGX46/250-4 S CO_2 T	6	21,80 / 26,20	③	65,7	38,4	253 / 330	247	22 I 7/8	28 I 1 1/8	2,5
HGX46/250-4 SH CO_2 T	6	21,80 / 26,20	③	66,3	38,8	253 / 330	247	22 I 7/8	28 I 1 1/8	2,5
HGX46/280-4 ML CO_2 T	6	24,40 / 29,30	③	59,9	35,9	231 / 283	247	22 I 7/8	28 I 1 1/8	2,5
HGX46/280-4 S CO_2 T	6	24,40 / 29,30	③	73,1	43,2	253 / 330	247	22 I 7/8	28 I 1 1/8	2,5
HGX46/280-4 SH CO_2 T	6	24,40 / 29,30	③	73,3	43,3	253 / 330	247	22 I 7/8	28 I 1 1/8	2,5
HGX46/310-4 ML CO_2 T	6	27,20 / 32,60	③	68,0	40,3	231 / 283	247	28 I 1 1/8	35 I 1 3/8	2,5
HGX46/310-4 S CO_2 T	6	27,20 / 32,60	③	81,5	48,5	253 / 330	265	28 I 1 1/8	35 I 1 3/8	2,5
HGX46/310-4 SH CO_2 T	6	27,20 / 32,60	③	81,7	48,6	253 / 330	265	28 I 1 1/8	35 I 1 3/8	2,5
HGX46/345-4 ML CO_2 T	6	30,20 / 36,20	③	75,3	44,6	253 / 330	247	28 I 1 1/8	35 I 1 3/8	2,5
HGX46/345-4 S CO_2 T	6	30,20 / 36,20	③	91,7	53,9	289 / 374	265	28 I 1 1/8	35 I 1 3/8	2,5
HGX46/345-4 SH CO_2 T	6	30,20 / 36,20	③	92,0	54,1	289 / 374	265	28 I 1 1/8	35 I 1 3/8	2,5

* PW = Part Winding, motors for part winding start 1 = 1. part winding 2 = 2. part winding

96219-05.2013-Gb Subject to change without notice

Explanations:

① Tolerance (± 10%) relates to the mean value of the voltage range. Other voltages and current types on request.

② - The specifications for max. power consumption apply for 50 Hz operation. For 60 Hz operation, the specifications have to be multiplied by the factor 1.2.
The max. working current remains unchanged.
- Take account of the max. operating current / max. power consumption when designing contactors, leads and fuses.
Switches: Service category AC3

③ 380-420 V Y/YY - 3 - 50 Hz PW
440-480 V Y/YY - 3 - 60 Hz PW
PW = Part Winding, motors for part winding start (no start unloaders required)
- Winding ratios: 66% / 33%
- Designs for Y/Δ on request

④ Compression joint for steel pipes

⑤ For soldering connections

Dimensions and connections

HGX2 CO_2 T

HGX2/70-4 CO_2 T HGX2/90-4 CO_2 T HGX2/110-4 CO_2 T

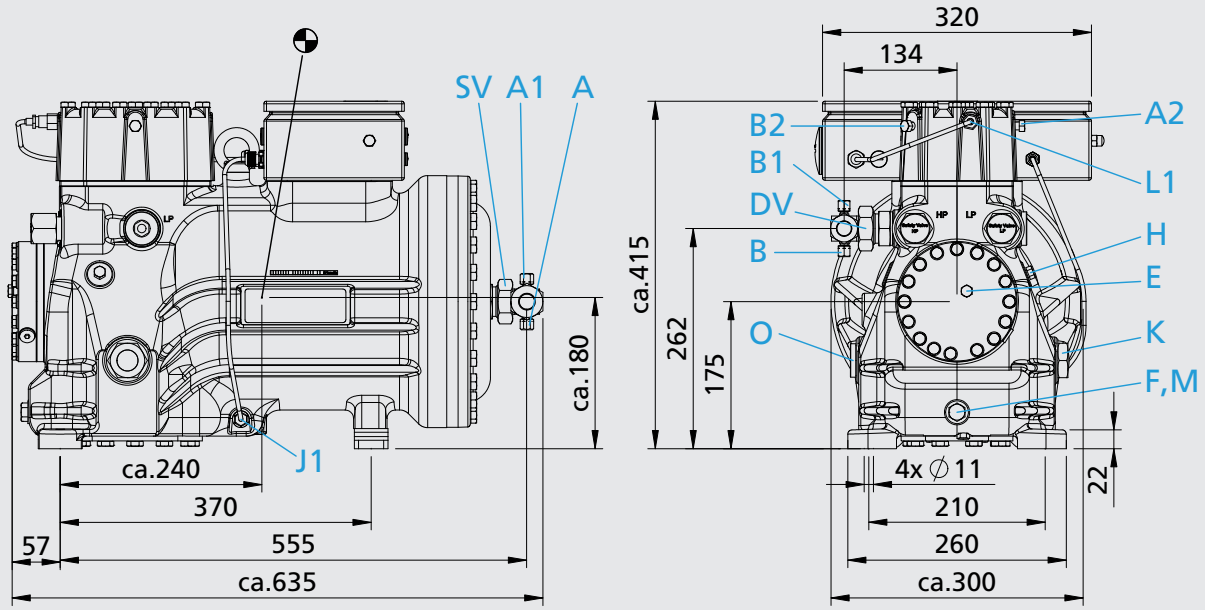

HAX2 CO_2 T

HAX2/70-4 CO_2 T HAX2/90-4 CO_2 T HAX2/110-4 CO_2 T

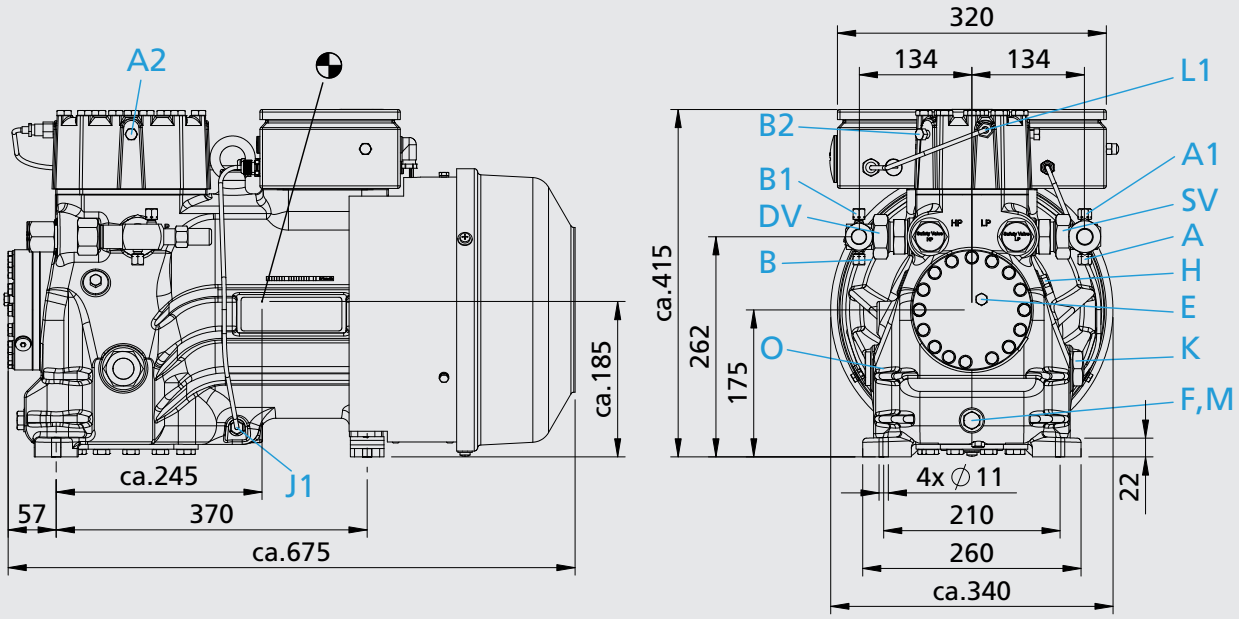

Dimensions in mm

Centre of gravity

- Connections see page 56
- Dimensions for anti-vibration pad see page 56

96219-05.2013-Gb Subject to change without notice

Dimensions and connections

HGX34 CO_2 T

HGX34/110-4 CO_2 T
HGX34/130-4 CO_2 T
HGX34/150-4 CO_2 T
HGX34/170-4 CO_2 T
HGX34/190-4 CO_2 T
HGX34/210-4 CO_2 T
HGX34/230-4 CO_2 T

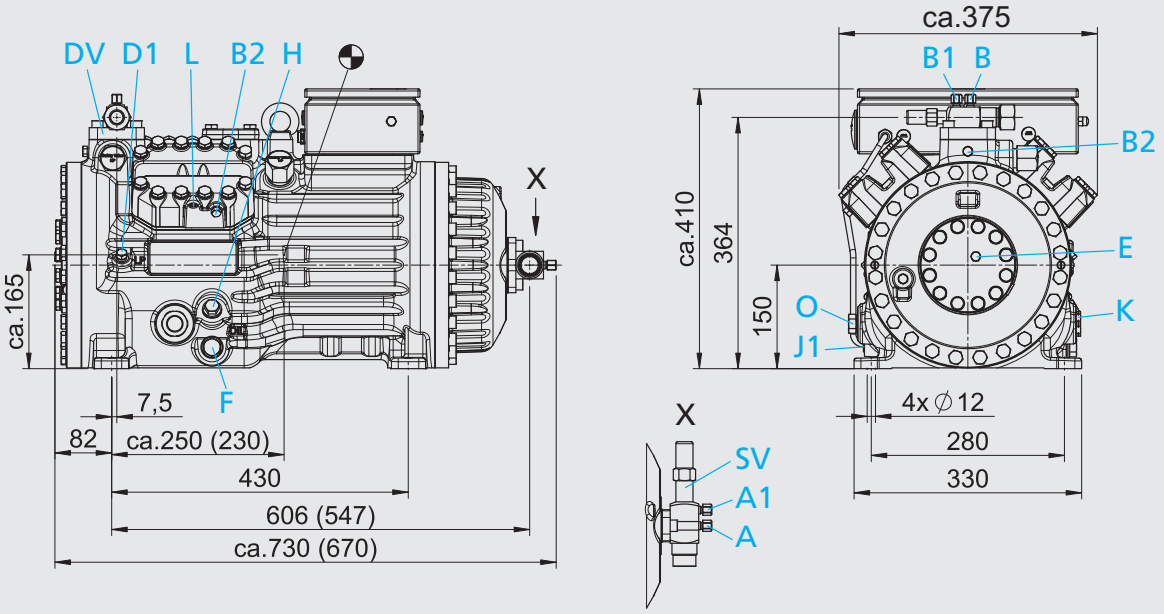

Dimensions in ( ) =

HGX34/110-4 ML CO_2 T
HGX34/110-4 S CO_2 T
HGX34/110-4 SH CO_2 T
HGX34/130-4 ML CO_2 T
HGX34/130-4 S CO_2 T
HGX34/130-4 SH CO_2 T
HGX34/150-4 ML CO_2 T
HGX34/150-4 S CO_2 T
HGX34/150-4 SH CO_2 T
HGX34/170-4 ML CO_2 T
HGX34/190-4 MLCO$_2$ T
HGX34/210-4 ML CO_2 T

HGX46 CO_2 T

HGX46/250-4 CO_2 T
HGX46/280-4 CO_2 T
HGX46/310-4 CO_2 T
HGX46/350-4 CO_2 T

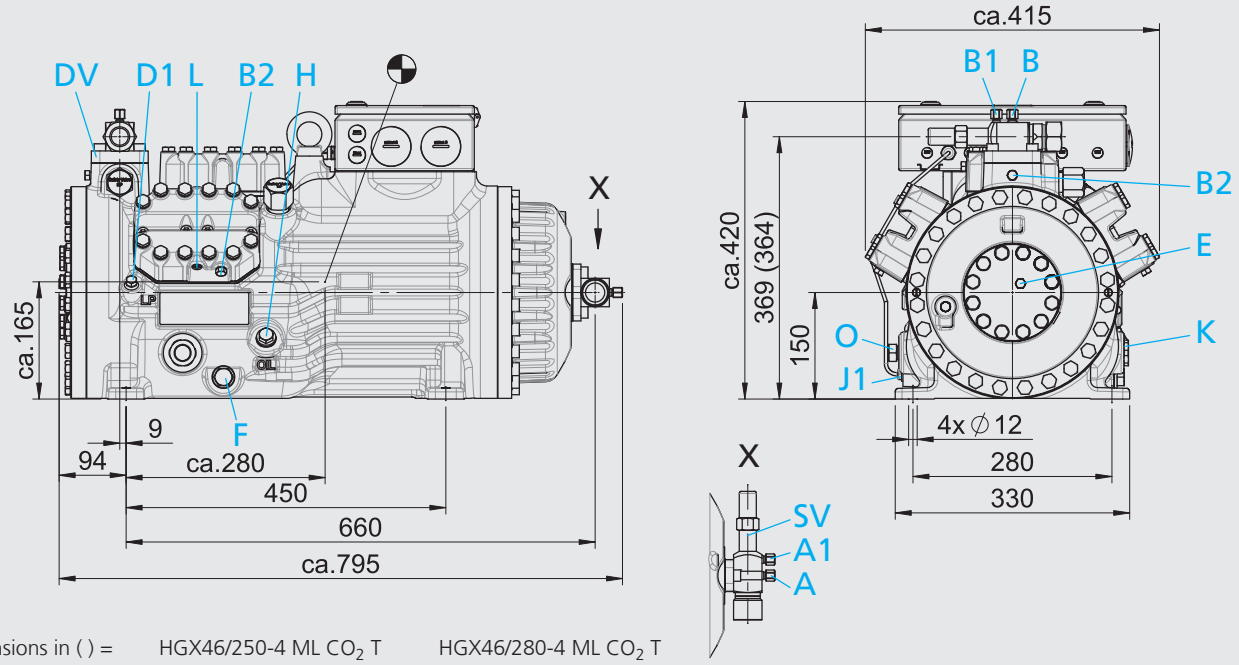

Dimensions in ( ) =

HGX46/250-4 ML CO_2 T
HGX46/250-4 S CO_2 T
HGX46/250-4 SH CO_2 T
HGX46/280-4 ML CO_2 T
HGX46/280-4 S CO_2 T
HGX46/280-4 SH CO_2 T

Dimensions in mm
Centre of gravity

- Connections see page 56
- Dimensions for anti-vibration pad see page 56

Connections

Connections		HGX2 CO_2 T / HAX2 CO_2 T	HGX34 CO_2 T	HGX46 CO_2 T
SV DV	Suction line Discharge line	please refer to Technical data page 51+52		
A	Connection suction side, not lockable	$^7/_{16}$ " UNF	$^7/_{16}$ " UNF	$^7/_{16}$ " UNF
A1	Connection suction side, lockable	$^7/_{16}$ " UNF	$^7/_{16}$ " UNF	$^7/_{16}$ " UNF
A2	Connection suction side, not lockable	$^1/_8$ " NPTF	-	-
B	Connection discharge side, not lockable	$^7/_{16}$ " UNF	$^7/_{16}$ " UNF	$^7/_{16}$ " UNF
B1	Connection discharge side, lockable	$^7/_{16}$ " UNF	$^7/_{16}$ " UNF	$^7/_{16}$ " UNF
B2	Connection discharge side, not lockable	$^1/_8$ " NPTF	$^1/_8$ " NPTF	$^1/_8$ " NPTF
D1	Connection oil return from oil separator	-	$^1/_4$ " NPTF	$^1/_4$ " NPTF
E	Connection oil pressure gauge	$^1/_8$ " NPTF	$^1/_8$ " NPTF	$^1/_8$ " NPTF
F	Oil drain	M22 x 1,5	M26 x 1,5	M26 x 1,5
H	Oil charge plug	$^1/_8$ " NPTF	M22 x 1,5	M22 x 1,5
J1	Oil sump heater	Ø 15 mm	Ø 15 mm	Ø 15 mm
K	Sight glass	G1"	$1^1/_8$" - 18 UNEF	$1^1/_8$" - 18 UNEF
L	Connection thermal protection thermostat	-	$^1/_8$ " NPTF	$^1/_8$ " NPTF
L1	Thermal protection thermostat (accessories)	$^1/_8$ " NPTF	-	-
M	Oil filter	M22 x 1,5	-	-
O	Connection oil level regulator	G1"	$^1/_2$ " NPTF	$^1/_2$ " NPTF

Dimensions for anti-vibration pad

Type	Ø a mm	b mm	c mm	d mm
HGX2 CO_2 T	50	30	M10	25
HAX2 CO_2 T	50	30	M10	25
HGX34 CO_2 T	50	30	M10	25
HGX46 CO_2 T	50	30	M10	25

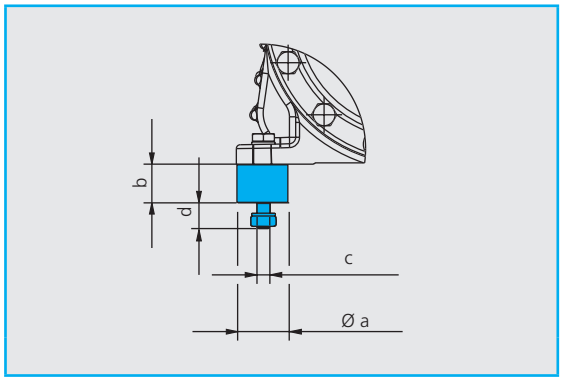

96219-05.2013-Gb Subject to change without notice

Scope of supply

Scope of supply	HGX2 CO_2 T / HAX2 CO_2 T	HGX34 CO_2 T	HGX46 CO_2 T
Semi-hermetic two cylinder reciprocating compressor with drive motor for part winding start – 4 pole version 380-420 V Y/YY - 3 - 50 Hz 440-480 V Y/YY - 3 - 60 Hz Single-section compressor housing with hermetically integrated electric motor	●		
HA Version: Motor is cooled by an integrated fan with air deflection hood 230 V - 1 - 50/60 Hz, 140 W / 0,71 A	●		
Semi-hermetic four cylinder reciprocating compressor with drive motor for part winding start – 4 pole version 380-420 V Y/YY - 3 - 50 Hz 440-480 V Y/YY - 3 - 60 Hz Single-section compressor housing with hermetically integrated electric motor		●	
Semi-hermetic six cylinder reciprocating compressor with drive motor for part winding start – 4 pole version 380-420 V Δ / YYY - 3 - 50 Hz 440-480 V Δ / YYY - 3 - 60 Hz Single-section compressor housing with hermetically integrated electric motor			●
Winding protection with PTC resistor sensors and electronic motor protection unit Bock MP10	●	●	●
Oil pump	●	●	●
Oil sump heater 230 V - 1 - 50/60 Hz, 160 W	●	●	●
Ölfüllung at ML and S: Bock C85E	●	●	●
Ölfüllung at SH: Bock C150E		●	●
Sight glass	●	●	●
Compressor decompression valve suction and discharge line	●	●	●
Inert gas charge	●	●	●
4 anti-vibration pads enclosed	●	●	●

[1] Motor for special voltage and/or frequency (on request)

ⓘ Oil sump heater is necessary due to the high CO_2 solubility in the oil.

Accessories

Accessories	HGX2 CO_2 T	HAX2 CO_2 T	HGX34 CO_2 T	HGX46 CO_2 T
Thermal protection thermostat (PTC sensor) IP67	●	●	●	●
Suction line valve with soldering / welding connection			●	●
Discharge line valve with soldering / welding connection			●	●
Suction line valve with cutting ring connection	●	●	●	●
Discharge line valve with cutting ring connection	●	●	●	●
Compressor oil Bock C85E as 1 liter refill unit	●	●	●	●
Compressor oil Bock C150E as 1 liter refill unit			●	●

96219-05.2013-Gb Subject to change without notice

Service - Made by GEA Bock

Worldwide, Up-to-Date, Comprehensive - GEA Bock on the Internet - www.bock.de

Products
- Comprehensive product brochure
- Data on all products
- Dimensions and exploded views
- Spare parts lists

Sales network
- Contact persons in over 70 countries
- Direct link to your trading partner

Company
- Current company information
- Company film
- Subsidiaries
- History
- References

News
- Company news
- Product news
- Current dates

Wordbock - Translation Tool
- Available as an app and
- As an online version on www.bock.de

Know-How
- Error analysis tool
- VAP software
- Comprehensive information

After Sales Service

GEA Bock offers you individual, personal consultation and assistance after the purchase as well.

As a customer, GEA Bock always has competent contact people available to you for technical questions.

During our business hours, you can reach us on our free hotline: 00 800 / 800 000 88.

We live our values.

Excellence • Passion • Integrity • Responsibility • GEA-versity

GEA Group is a global engineering company with multi-billion euro sales and operations in more than 50 countries. Founded in 1881, the company is one of the largest providers of innovative equipment and process technology. GEA Group is listed in the STOXX® Europe 600 index.

GEA Refrigeration Technologies

GEA Bock GmbH

Benzstraße 7, 72636 Frickenhausen, Germany
Phone: +49 7022 9454-0, Fax: +49 7022 9454-137
bock@gea.com, www.bock.de, www.gea.com