ART SERIES

SETUP, INSTALLATION, OPERATION & PROGRAMMING MANUAL

COVERS
ART170, ART400, ART225, ART900
SYNTHESISED
RADIO MODEMS & REPEATERS

Revision E, 13/05/02

CONTENTS

5.0 INTRODUCTION

6.0 DIGITAL MODES OF OPERATION & PROTOCOLS

9.0 INSTALLATION

10.0 I.O. MODULES & PROTOCOLS

1

INTRODUCTION

1.0 INTRODUCTION

1.1 PRODUCTS COVERED

This Manual covers the ART Series of Radio Modems that have been designed for portable, mobile or fixed data application in commercial and industrial systems.
Information is provided to configure, program, install, and operate the products in various Applications. These include point to point, point to multi-point and networks with ART's configured as repeaters. With the built-in test software, first line "Go-No Go" testing can be easily performed. Component level servicing is not covered in this document, if the product fails its first line testing it should be returned to a service centre.

1.2 INTRODUCTION

The ART Series are high performance, very low current consumption, dual Synthesised Radio Modems, designed specifically for the Telemetry and Data market, where the fast transfer of data is required over reliable wireless links.

The ART was designed as a result of market research into widely used systems and protocols, so the ART should work in the majority of applications. As a result the ART will fit into almost any system using licensed, or license exempt telemetry channels in the VHF, UHF & 900MHz bands.

The ART product is unique in its use of a large flash memory microprocessor to control the RX & TX radio modules, external interfaces, and at the same time it functions as a full duplex modem with programmable over the air speeds of 150 - 9600bps, with forward error correction (FEC) as a programmable option at 9600bps.

1.3 OVERVIEW

1.3.1 RADIO FREQUENCY (RF) SECTION

The RF modules have separate synthesisers to enable full duplex operation and in simplex operation the dual synthesisers facilitate very fast turn around times. The ART has been specially designed with very low group delay filters to provide the best path for high speed digital signals.
The ART employs separate receiver and transmitter modules connected to a common microprocessor and interface board via a plug & socket arrangement. In the unlikely event that a R.F unit fails, it can be easily replaced and sent to our service centre for repair.

No attempt should be made to repair the unit except by experienced RF personnel with Proper RF test equipment available.

NOTE: Adjusting any of the controls within the RF module may degrade the transceiver's performance or put its operation outside the approved specification.

1.3.2 TRANSMITTER

The transmitter can be programmed anywhere within a pre-aligned bandwidth, which is within a wider tuneable F band, details of the bandwidths are in the technical specifications. Both High power (50mW – 5Watts) and low power (10mW – 1Watt) products are available.
For higher power an external RF amplifier can be added.

1.3.3 RECEIVER

The receiver is a very low current double conversion superheterodyne with an active balanced mixer for very good Intermodulation. Careful attention to spurious response, adjacent channel and blocking performance, makes the product ideal for crowded telemetry channels.
To achieve the high performance the programmable bandwidth of the receiver has been limited (for UHF it is 12MHz, ± 6MHz from centre frequency), full details are in the technical specification section.
Should re-alignment be required, the unit can be sent back to our service centre, or with proper test equipment, a qualified engineer can follow the alignment procedure in our Technical Manual.

1.3.4 MPU CONTROL & INTERFACE BOARD

The Microprocessor (MPU) control & interface board is the heart of the product and at the centre is a 128K flash microprocessor that controls all the interface circuits to the radio modules and external Input/outputs. As well as the control functions, the processor provides DSP functionality that enables full duplex modem operation between 150 – 9600bps with the option of FEC at 9600bps.
The board contains all necessary electronic potentiometers for full remote alignment and control, these settings and other parameters are stored within the MPU 's non-volatile EEPROM.

1.3.5 PROCESSOR FIRMWARE/SOFTWARE

The processor has 128K of flash memory from which the code is executed and internal EEPROM for storing programmed parameters. As only about 50% of the memory space is used at the moment , there is plenty of space for future upgrades and custom applications.

1.4 SOFT MODEM

The ART features a full duplex "soft modem" which offers unparalleled performance and flexibility over a wide range of speeds and formats and enables future formats to be downloaded from a PC or over the air. Within a 12.5KHz channel, the unit can be programmed for 150-2400bps FSK/FFSK with Bell202 & V23 supported, 4800bps GMSK & 9600bps 4 Level FSK, with or without FEC.

1.5 CUSTOM SOFTWARE

Custom software or protocols for specific client applications, can be written and included as PC programmable options in relatively short time scales and normally at nominal costs. Further details can be obtained from the sales office.

1.6 PROGRAMMING

Apart from internal factory set-up links, all the parameters of the ART Series are PC programmable via the serial port or over the radio link via a special secure mode.

Programs are available in DOS or Windows 95/98 software with, full details of all the programmable parameters are covered in the Programming section 6.

1.7 OPTIONAL KEYPAD & DISPLAY

Provision has also been made in the design to accommodate the development of a keypad and liquid crystal display (LCD) for local programming without the use of a PC and for displaying the status of the product and connected I.O. modules. Further details are available from the sales office.

1.8 COMPATIBILITY WITH OTHER PRODUCTS

The ART series is backward compatible with the Communique CMD400 products, and can be mixed in with systems using the CMD400. Any slight differences are outlined in Section 6.0.

1.9 LOCAL DIGITAL I.O.

The ART Series has two local inputs and two outputs that can be configured and used under the management and diagnostics software. For additional analogue or digital I.O the ART700 Series of I.O. modules can easily be connected to the I2C bus interface.

1.10 CONTINUOUS DEVELOPMENT

The ART series has been designed with continuous development in mind and with less than 50% of the code space currently in use, there is plenty of room for protocols such as TCP/IP to be added in later. For additional space (should it be required) a piggy back memory board with a further 512k is available to download new code to the processor.
Once deployed in the field, changes and upgrades to the firmware can easily be sent over the radio link via our secure over air programming protocol.

1.11 IMPORTANT NOTICES

1.11.1 COPYRIGHT

All rights to this manual are the sole property of R.F. Technologies Ltd, The copying of the manual in whole or in part by any method without written permission is strictly prohibited .

1.11.2 RIGHT TO CHANGE

In the interest of improvement, R.F. Technologies reserves the right to change the technical specifications or functions of its product without notice.

1.11.3 SOFTWARE

R.F. Technologies Ltd software is delivered "as is". R.F. technologies Ltd does not grant any kind of warranty or guarantees on its saleability or it's suitability for use in specific applications.
Under no circumstances is R.F. Technologies liable for any damages arising from using the software.
The copyrights relating to all software is the sole property of R.F. Technologies Ltd
Any coping, editing, translating or modifying is strictly forbidden without prior written consent from R.F. Technologies Ltd

1.11.4 SAFETY CRITICAL APPLICATIONS

The ART series have not been designed for or intended for use in safety critical or life support applications. No functional warranty is given if the product is used in such applications.

1.11.5 USE

The ART radio modems have been designed to work on various licensed and license free frequency bands in use around the world. The user must ensure that the radio modem is used under the terms & license conditions in the license free bands.
In licensed bands, the user must obtain permission and the necessary licenses from the local authorities. For further information see section 2.2.

2

SPECIFICATIONS

2.0 SPECIFICATIONS

2.1 TECHNICAL SPECIFICATIONS:

2.1.1 GENERAL

Frequency Range:	
ART400TR	380 - 512MHz F0 380 – 406MHz F1 406 - 430MHz F2 430 - 450MHz F3 450 - 475MHz F4 470 - 490MHz F5 490 - 512MHz
ART170TR	F1 140 – 150MHz F2 150 - 165MHz F3 160 – 175MHz
ART900TR	820 – 950MHz F bands to be advised Transmitter & Receiver sections may be ordered on different ""F" Bands.
Programmable Bandwidths:	UHF 12MHz VHF 5MHz 900MHz 20MHz
Minimum Programmable Channel Step:	6.25 KHz or 5 KHz
TX/RX Channel Spacing:	Any within the programmable band.
Number of Channels:	80 sequential or 32 discrete user programmable channels, field selectable via two BCD switches, or by remote
Channel Spacing:	12.5 KHz (optional 20/25/30KHz)
Mode of Operation:	Single frequency simplex Two frequency simplex (semi-duplex), Full duplex, as standard. Store and Forward and Repeater modes available to custom order.
Power Requirements:	9.6V - 15VDC (Negative Ground) 12VDC, 24VDC & 50VDC (Negative or positive Ground) available via a DIN power converter
Rx Current	Fast simplex/Duplex 100mA Simplex/Power Saved 70mA Power save on 150uA
Transmitter	5Watts 2amps

	500mW 675mA 50mW 300mA
Fuse:	Internal 3A Fast Blow
Reverse Polarity Protection:	Series Diode
Operating Temperature:	-30 deg C to +60 deg C.
Humidity:	0 - 95% Non-Condensing
Frequency Stability:	<2.0ppm -30deg C to +60deg.C optional 1.5ppm –25deg.C to +60deg.C
Construction:	Milled Aluminium enclosure
Size:	156mm W x 125 H x 45mm D
Weight:	800gms
Connectors:	
Serial Interface	9W "D" Female
Antenna	BNC
Audio/Landline	4Way pluggable terminal block
DC Power	2Way pluggable terminal block
I.O. Connector	8way pluggable terminal block
LED indicators:	RX RF Carrier Detect/Busy TX Transmit SYS System RTS Request to Send CTS Clear to Send DCD Data Carrier Detect RXD Receive Data TXD Transmit Data RI Ring Indication DSR Data Set Ready DTR Data Terminal Ready
Switches	2 x 0-9 for channel change & programming enable.

2.1.2 TRANSMITTER:

R.F. Output Power:	ART 1Watt 10mW – 750mW PC programmable ART 5Watt 50mW - 5Watts PC programmable
Output Impedance:	50 ohms
Duty Cycle:	70% without additional heat sinking
Time Out Timer:	Programmable 0 - 255 Seconds
Modulation:	Internal Modem; FSK, FFSK, GMSK & 4 level FSK. External, +3dBm to -20dBm into 600 Ohm, Programmable Pre-emphasised or Flat response.
TX Keying:	Ground to enable, TTL compatible The modem can be programmed to key on detection of valid V23 or Bell 202 tones instead of using a conventional TX enable line, when the external line input is used.
Deviation:	7.5 KHz Max. (Subject to channel spacing)
Adj. Channel Power:	Better than 65dB (12..5 KHz)
Hum and Noise:	Better than 40dB
Transmitter Intermodulation:	15dB without a circulator 40dB with an external circulator
Spurious Emissions:	< 0.25uW (4nW within specified bands)
Rise Time:	< 5mS

2.1.3 RECEIVER:

Sensitivity:	Better than 0.25µV (-120dBm) for 12dB SINAD (de-emphasised response)
Spurious Response:	>80dB
Blocking:	>90dB relative to 1µV
Intermodulation:	>70dB with 9600bps data
Adjacent Channel:	>65dB at 12.5 KHz
IF Frequencies:	VHF & UHF 45MHz and 455 KHz 900MHz 70MHz and 455 KHz

Spurious Emissions:	<2nW
External Audio Output:	+3dBm to -20dBm into 600 ohms with Programmable De-emphasised or Flat response and mute enable.
Mute Response Time:	<3msec
Received Signal Strength (RSSI):	Range -120dBm to -40dBm

2.1.4 INTERNAL MODEM

Serial Comms:	Asynchronous or Synchronous with custom software. Baud rate programmable between 150bps and 38400bps
Interface:	Selectable RS232 or 5V TTL plus inverted/non-inverted,
Parity:	Programmable odd, Even or None
Stop bits:	Programmable 1 or 2
Data Bits:	Programmable 7 or 8
Synchronous/Async.	Programmable either up to 1200bps, above 1200bps synchronous
Signalling Formats:	Programmable V23, Bell202, up to 1200 baud, 2400 baud FFSK, 4800 baud GMSK, 9600 baud 4 level FSK.
Baud date:	150 – 9600bps within 12.5 KHz
Bit Error Rate:	150 - 2400 baud, less than 1 x 10-3 at –120dBm 4800 baud, less than 1 x 10-3 at –117dBm 9600 baud less than 1 x 10-3 at –112dBm 9600 baud, less than 1 x 10-3 at –115dBm with FEC on.

2.1.5 BIT ERROR RATE BER

The Bit error rate quoted in the specification is for fixed messages with no Forward Error Correction (FEC) and represents that which will be obtained from typical data sent over the link. The BER should not be compared with other manufactures figures unless the data format is known, as many manufacturers quote a BER based on an alternating data pattern, which will obviously give much better BER results.

In the interest of improvement the above specifications are subject to change without notice.

2.2 APPROVALS AND LICENSING

The ART Series were designed to meet relevant world wide standards as outlined below, should others standards be required, please contact the sales office.

2.2.1 Old Pre ETSI UK Approvals

MPT1329: For UHF telemetry applications, under this specification the RF output power is limited to 500mW ERP. The specification is now replaced by ETS300-220 but the UK channels remain the same (see the channel plan in the later part of this section).

MPT1328: For VHF product with the power limited to 10mW. The specification has now been replaced with ETS300-220, but the UK channels remain the same (see the channel plan in the later part of this section).

MPT1411: The unit has been tested to MPT1411 and the replacementVNS2111 for licensed applications with a maximum data rate of 9600bps within a 12.5 KHz channel. A licence is required and the output power is normally stated on the licence.

Further information can be obtained from:
CSS Spectrum Management Services

2.2.2 UK & European Harmonised Standards

ETS300-220 The ART VHF, UHF & 869MHz products have been tested and meet the requirements of ETS EN300-220 for licensed exempt applications with a power range of 5mW – 500mW. At VHF & UHF the frequencies and permitted power levels will very from country to country but at 869MHz they are set to a common standard.

ETS300-113 The unit meets the specification ETS EN300-113 for licensed data applications. The Intermodulation response and frequency stability meet the requirement for fixed station (Base Station) applications but to meet the transmitter Intermodulation response for common site use a circulator will be required. Details of suitable units are available from the sales office.

ETS301-489 The unit meets the requirements of EST EN301-489XXXX and carries the **CE** Mark.

2.2.3 Australian AS 4268.2-1995

Product has not been submitted for type acceptance at the time this manual was written, however the ART will meet the requirements for licensed & licensed exempt specifications.

2.2.4 U.S.A FCC Part 90 & 15 & Canadian RSS-122/119

This device complies with part 15 of the FCC Rules. Operation is subject to the following two conditions:
(1) This device may not cause harmful interference, and

(2) This device must accept any interference received, including interference that may cause undesired operation.

WARNING
Changes or modifications not expressly approved by the party responsible for compliance could void the user's authority to operate the equipment.
NOTE: This equipment has been tested and found to comply with the limits for a Class A digital device, pursuant to part 15 of the FCC Rules. These limits are designed to provide reasonable protection against harmful interference when the equipment is operated in a commercial environment. This equipment generates, uses, and can radiate radio frequency energy and, if not installed and used in accordance with the instruction manual, may cause harmful interference to radio communications. Operation of this equipment in a residential area is likely to cause harmful interference in which case the user will be required to correct the interference at his own expense.

Industry Canada Certification
This device complies with Industry Canada RSS 119, under certification number TBD.

IC Class A Compliance
This device complies with the Class A limits for radio noise emissions as set out in the interference causing equipment standard entitled "Digital Apparatus," ICES -003 of Industry Canada.

WARNING
To satisfy FCC/IC RF exposure requirements for mobile transmitting devices, a separation distance must be maintained between the antenna of this device and persons during operation. To ensure compliance, operations at closer than this distance in not recommended. The following table show this distance for different gain of antennas:

Gain of Antenna (dB)	Minimum Separation Distance (metre)
Unity	0.5
3	0.7
6	1.0
8	1.3
10	1.6
12	2.0

2.3 OPERATING CHANNELS

2.3.1 UK TELEMETRY CHANNELS IN SETUP PROGRAM

From the PC Setup program the ART400 can be programmed with either all MPT1411 or MPT1329 channels. A mixture of both channels can be entered discretely from the PC program.

MPT1411/VNS2111 Channels

CHANNEL	SCANNER	OUTSTATIONS
1	457.50625	463.00625
2	457.51875	463.01875
3	457.53125	463.03125
4	457.54375	463.04375
5	457.55625	463.05625
6	457.56875	463.06875
7	457.58125	463.08125
8	457.59375	463.09375
9	457.60625	463.10625
10	457.61875	463.11875
11	457.63125	463.13125
12	457.64375	463.14375
13	457.65625	463.15625
14	457.66875	463.16875
15	457.68125	463.18125
16	457.69375	463.19375
17	457.70625	463.20625
18	457.71875	463.21875
19	457.73125	463.23125
20	457.74375	463.24375
21	457.75625	463.25625
22	457.76875	463.26875
23	457.78125	463.28125
24	457.79375	463.29375
25	457.80625	463.30625
26	457.81875	463.31875
27	457.83125	463.33125
28	457.84375	463.34375
29	457.85625	463.35625
30	457.86875	463.36875
31	457.88125	463.38125
32	457.89375	463.39375
33	457.90625	463.40625
34	457.91875	463.41875
35	457.93125	463.43125
36	457.94375	463.44375
37	457.95625	463.45625
38	457.96875	463.46875
39	457.98125	463.48125
40	457.99375	463.49375
41	458.00625	463.50625
42	458.01875	463.51875
43	458.03125	463.53125
44	458.04375	463.54375
45	458.05625	463.55625

46	458.06875	463.56875
47	458.08125	463.58125
48	458.09375	463.59375
49	458.10625	463.60625
50	458.11875	463.61875
51	458.13125	463.63125
52	458.14375	463.64375
53	458.15625	463.65625
54	458.16875	463.66875
55	458.18125	463.68125
56	458.19375	463.69375
57	458.20625	463.70625
58	458.21875	463.71875
59	458.23125	463.73125
60	458.24375	463.74375
61	458.25625	463.75625
62	458.26875	463.76875
63	458.28125	463.78125
64	458.29375	463.79375
65	458.30625	463.80625
66	458.31875	463.81875
67	458.33125	463.83125
68	458.34375	463.84375
69	458.35625	463.85625
70	458.36875	463.86875
71	458.38125	463.88125
72	458.39375	463.89375
73	458.40625	463.90625
74	458.41875	463.91875
75	458.43125	463.93125
76	458.44375	463.94375
77	458.45625	463.95625
78	458.46875	463.96875
79	458.48125	463.98125
80	458.49375	463.99375

2.3.2 UK MPT1329 Channels:

The ART400TR-1 & 5 can be programmed to operate on the full MPT1329 band of channels with access to channels 26, 27 & 32 denied, in line with MPT1329 band plan.
The ART400 should be programmed for a maximum power level of 500mW

CHANNEL	FREQUENCY
1	458.5000 Guard Ch.
2	458.5125
3	458.5250
4	458.5375
5	458.5500
6	458.5625
7	458.5750
8	458.5875
9	458.6000
10	458.6125
11	458.6250
12	458.6375
13	458.6500
14	458.6625
15	458.6750
16	458.6875
17	458.7000
18	458.7125
19	458.7250
20	458.7375
21	458.7500
22	458.7625
23	458.7750
24	458.7875
25	458.8000
26	458.8125
27	458.8250 Not Used
28	458.8375 Not Used
29	458.8500
30	458.8625
31	458.8750
32	458.8875
33	459.9000 Not Used
34	459.9125
35	459.9250
36	459.9375
37	459.5000 Guard Ch.

2.3.3 MPT1328 Channels:

A VHF ART can be programmed for all MPT1328 channels, however the RF power level should be limited to 10mW to comply with the license regulations.

CHANNEL	FREQUENCY
1	173.2000.
2	173.2125
3	173.2250
4	173.2375
5	173.2500
6	173.2625
7	173.2750
8	173.2875
9	173.2000
10	173.2125
11	173.2250
12	173.2375
13	173.2500

2.3.3 European 869MHz Band

Under the European ETSI recommendation the range of 869.000 – 869.650 is reserved for license free radio applications within the European Union. However, the implementation &
use may vary from country to country and hence local regulations must be checked, prior to deployment. In accordance with CEPT/ERC 70-03 , an ERP (effective radiated power) of 500mW is permitted in the range 869.400 – 869.650.

The ETSI 868MHz channels reserved for 500mW telemetry applications can be programmed into an ART400TR-1 or 5 via the PC software .

CHANNEL	FREQUENCY
1	869.4000.
2	869.4125
3	869.4250
4	869.4375
5	869.4500
6	869.4625
7	869.4750
8	869.4875
9	869.5000
10	869.5125
11	869.5250
12	869.5375
13	869.5500
14	869.5625
15	869.5750
16	869.5875
17	869.6000
18	869.6125
19	869.6250
20	869.6375
21	869.6500

2.3.3 MPT1328 Channels:

A VHF ART can be programmed for all MPT1328 channels, however the RF power level should be limited to 10mW to comply with the license regulations.

CHANNEL	FREQUENCY
1	173.2000.
2	173.2125
3	173.2250
4	173.2375
5	173.2500
6	173.2625
7	173.2750
8	173.2875
9	173.2000
10	173.2125
11	173.2250
12	173.2375
13	173.2500

2.3.3 European 869MHz Band

Under the European ETSI recommendation the range of 869.000 – 869.650 is reserved for license free radio applications within the European Union. However, the implementation & use may vary from country to country and hence local regulations must be checked, prior to deployment. In accordance with CEPT/ERC 70-03 , an ERP (effective radiated power) of 500mW is permitted in the range 869.400 – 869.650.

The ETSI 868MHz channels reserved for 500mW telemetry applications can be programmed into an ART400TR-1 or 5 via the PC software .

CHANNEL	FREQUENCY
1	869.4000.
2	869.4125
3	869.4250
4	869.4375
5	869.4500
6	869.4625
7	869.4750
8	869.4875
9	869.5000
10	869.5125
11	869.5250
12	869.5375
13	869.5500
14	869.5625
15	869.5750
16	869.5875
17	869.6000
18	869.6125
19	869.6250
20	869.6375
21	869.6500

3

SOFTWARE

&

ANCILLARY ITEMS

3.0 SOFTWARE AND ANCILLARY ITEMS

3.1 PC SOFTWARE

Dedicated PC software has been written to support the ART series, to enhance its operation, and provide unrivalled versatility. The software covers local & remote programming, installation, network management, local & remote firmware upgrades, first line service and factory testing.

3.2 CLIENT PROGRAMMING SOFTWARE

Programming software in DOS (with Windows 95/98 being written) is available for the ART Series, a full description of the DOS version is outlined in section 6.

3.3 FACTORY PROGRAMMING SOFTWARE

The factory version includes all the factory alignment and test additions.

3.4 BIT ERROR RATE (BER)SOFTWARE

The BER Test software, enables two ART's to communicate via serial ports on two PC's for the purpose of BER testing and provides a quick and easy Go/No Go test.

3.5 TEST & ALIGMENT SOFTWARE

The ART products have extensive self test routines built into the product and under the control of PC software, in conjunction with an RF test set, the ART will perform an in-depth self test of the Receiver, Transmitter & Control and interface board, even down to plotting the individual frequency responses curves of the data paths. This can be used in first line testing of the product and for re-alignment when used in conjunction with suitable test equipment.

3.6 NETWORK MANAGEMENT SOFTWARE

3.6.1 INSTALLATION

At the point of installation, the Network Management software provides engineers with relevant software tools to align antennas, check path links in both directions and provide performance data of the link at various RF levels with different baud rates.

3.6.2 OPERATION WITHIN THE NETWORK

Once the network is operational, the software can be used to continue monitoring the link's performance as well as being able to reprogram any, or all of the outstations normal programmable parameters remotely over the radio link.

3.6.3 ADDITIONAL FEATURES

In additional to the normal programming parameters the following information can also be retrieved from the network..

3.6.3.1 Internal Temperature Measurement

The internal temperatures within the ART's in the network and within the base station can be displayed, this is very useful for looking at any frequency drift or performance problems due to abnormally high or low temperature differentials.

3.6.3.2 Power Supply Voltage

Although the ART can work at 100% with an input voltage as low as 9V6DC. The normal input would be 12VDC, hence the ability to measure and display the input voltage at each and every ART within the network could be very useful, as it would show battery performance trends over time and alert the user of possible battery problems, long before they became a problem.

3.6.3.3 RX & TX Frequency offset measurement & RF re-alignment

Any receiver or transmitter frequency off set at an outstation or repeater can be measured and the percentage offset compared to the base station. If the off set is outside reasonable limits, a global or individual command will re-align the oscillators to that of the base station.

3.6.3.4 Local/Remote Firmware Upgrades

Provided the optional memory card is fitted, the user can download new firmware to one or all of the outstations, via the very safe and secure encrypted protocol within the network management software.

3.6.3.5 Local I.O. Control

The ART has two digital inputs and two digital outputs for local control & monitoring,
With the aid of the network management software these I.O can be read or set.

3.7 FUTURE SOFTWARE DEVELOPMENTS

As the I.O. and other products are developed, so software will be developed to provide the user as much flexibility as possible.

3.7.1 NON INTRUSIVE NETWORK MANAGEMENT SOFTWARE

Network Management software is in the process of being completed and will enable system operation and performance to be monitored via an XT9000 base , independently to the protocol running. Alternatively, the commands and controls could be written and included in the system software.

3.8 ANCILLARY PRODUCTS

3.8.1 POWER SUPPLIES WITH CHARGERS

ART750	80- 250VAC to 12VDC 3 Amps with backup battery charger & fault reporting via the I2C Bus
ART751	18 – 60VDC isolated to 12VDC 3 Amps with backup battery charging and fault reporting via the I2C bus

3.8.2 RF POWER AMPLIFIERS

ART400PA-10	UHF 5Watt to 10Watt RF power amplifier with built-in VSWR facility that measures Forward & Reflected power and conveys the information back to the ART400 via the I2C bus.
ART400PA-25	As above but 25Watts.

ART170PA-10 VHF 5Watt to 10Watt RF power amplifier as the ART400PA-10
ART170PA-25 VHF 5Watt to 25Watt RF power amplifier as the ART400PA-25

3.8.3 DIN I.O. MODULES

ART710	8 Digital programmable Input or Output
ART720	4 12bit Analogue Outputs Current
ART721	4 12bit Analogue Outputs Voltage
ART730	4 12bit Analogue Inputs Current or Voltage
ART740	4 Digital I.O. 2 12bit Analogue Inputs, 2 12bit Analogue Outputs
ART780	I2C Protocol converter to MODBUS, CANBUS, DEVICENET etc.
ART781	2 x RS232/485 to I2C Bus converter
ART782	GPS module
ART790	Duplicated controller

3.8.4 ENCLOSURES

19 inch rack to take an ART400 and power supply

Lockable IP51 wall cabinet to take an ART400, power supply, I.O. and backup battery.

IP67/68 Enclosures available to take most modules

3.8.5 LEADS & CABLES

RS232 cable 9 Way "D" to 9Way “D”
Store and Forward & Repeater connecting lead between two radios
“N” to BNC Coax Cable Adapter for Chassis Mounting

3.8.6 RF ADAPTERS & PARTS

Duplexer
Transmitter circulator
Receiver Antenna Splitter
External Solid State Antenna Switch
Lightning Arrester with “N” Connectors
Lightening Arrester with “BNC” Connectors

3.8.7 MANUALS

Programming, installation and operations manual

3.8.8 BACKUP BATTERY PACKS

Full range in stock to fit the above enclosures.

3.8.9 SOLAR PANELS & CONTROLLERS

Solar panels & controllers/battery chargers are available for most applications, for further information, please contact the sales office.

3.8.10 ANTENNAS

We stock a full range of antennas for most applications. For a full list please contact the sales office.

4

SET-UP & INTERFACE

4.0 SET-UP AND INTERFACE DESCRIPTION

4.1 INTERNAL LINKS

The exploded view shows the main components of the radio modem; the milled enclosure, MPU control & interface board, transmitter module, receiver module and LED board.
The view also shows the internal links JP1, JP5, JP11 & JP12 that are set during production.
Normally once the equipment is deployed, these links would never be changed.

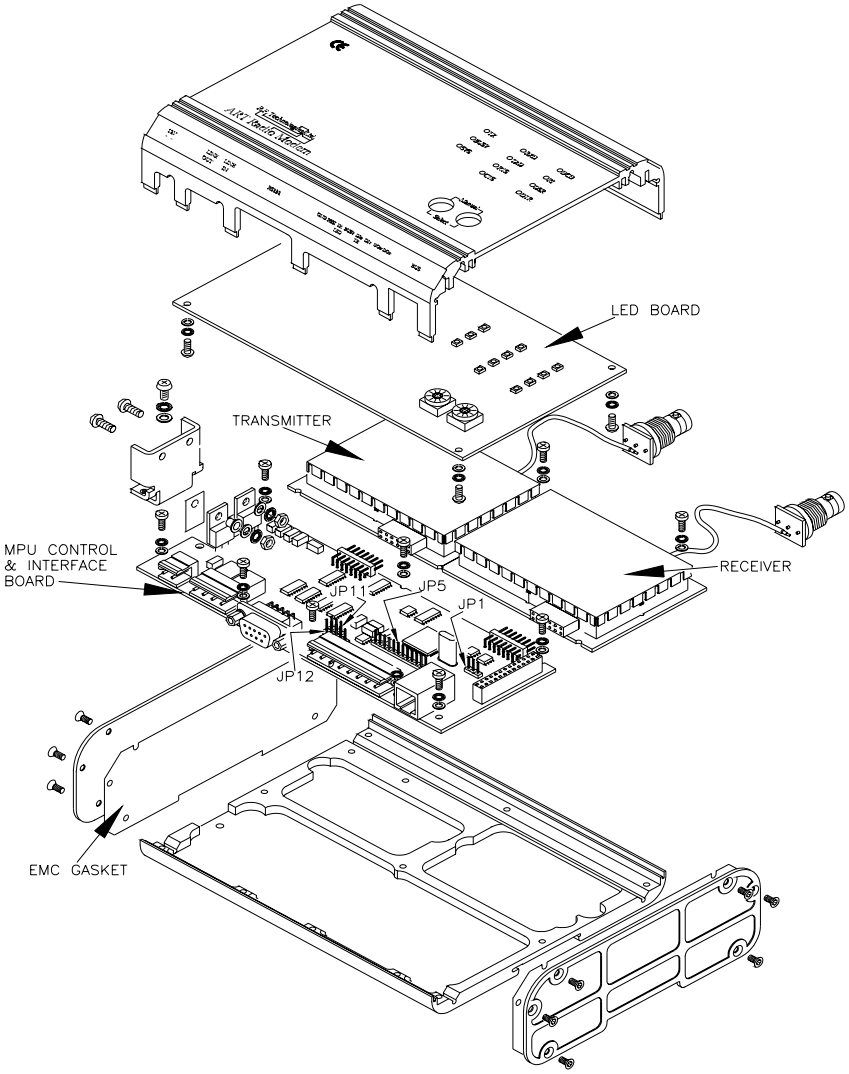

4.2 ANTENNA SETUP

4.2.1 SIMPLEX, SEMI-DUPLEX & FULL DUPLEX

The ART product can be operated in single frequency simplex, two frequency simplex (semi-duplex) or full duplex, provided the channels are within the bandwidth of the product.
This is particularly useful when using the unit in the UK, as MPT1411 (two frequency simplex/duplex) and MPT1329 (single frequency simplex) channels can be programmed and used together.

4.2.2 SINGLE OR DUAL ANTENNA OPERATION

The ART product is normally ordered for Simplex single antenna or Simplex/Duplex dual antenna operation However with the correct parts the conversion from one to the other takes only a few minutes.

4.2.3 COAX CONFIGURATIONS

For two antenna operation individual coaxes from the receiver and the transmitter module connect to separate BNC connectors on the chassis. In single antenna operation the receiver 's internal antenna connector is connected to the RX port on the transmitter module and a blanking cap is fitted where the RX BNC would normally be fitted. The RX port on the transmitter is a pin diode switched output with isolation to stop excessive RF power being fed into the receiver during transmit. Fitting of link JP1 sets a hard wired control line that switches off the receiver's front end during transmission for additional protection.

4.2.4 DRAWING SHOWING ANTENNA LINKS JP1

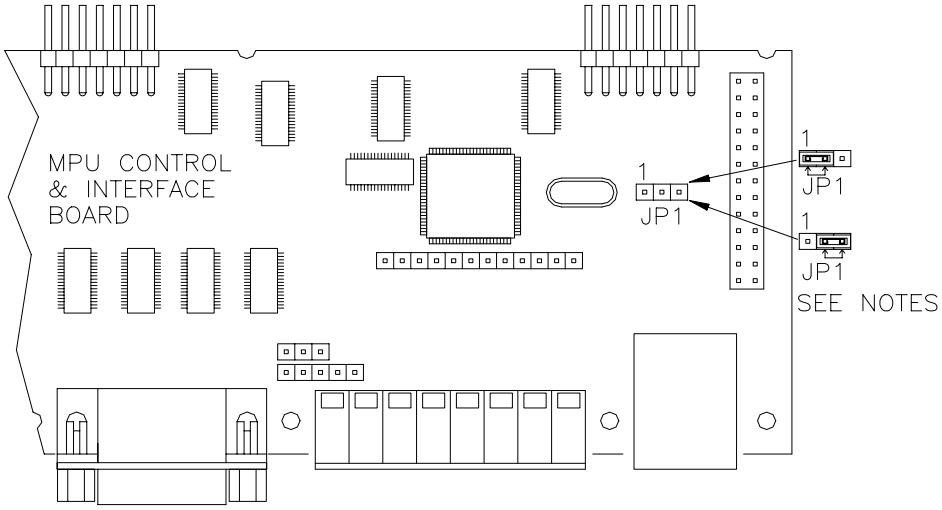

JP1 Link **1-2** for 2 antenna operation
Link **2-3** for single antenna operation

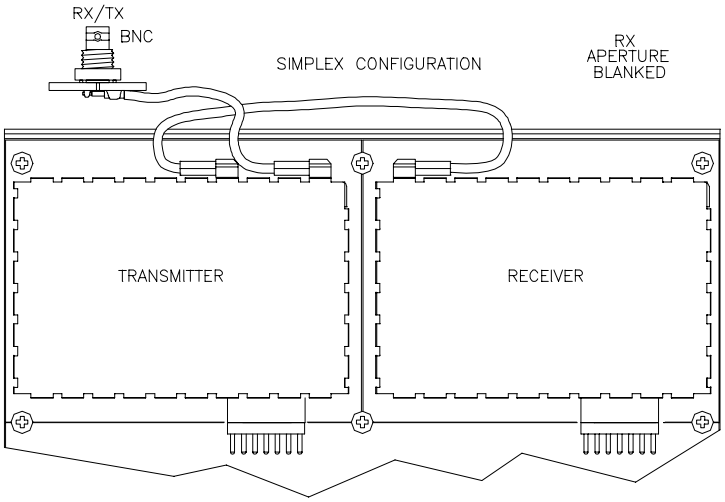

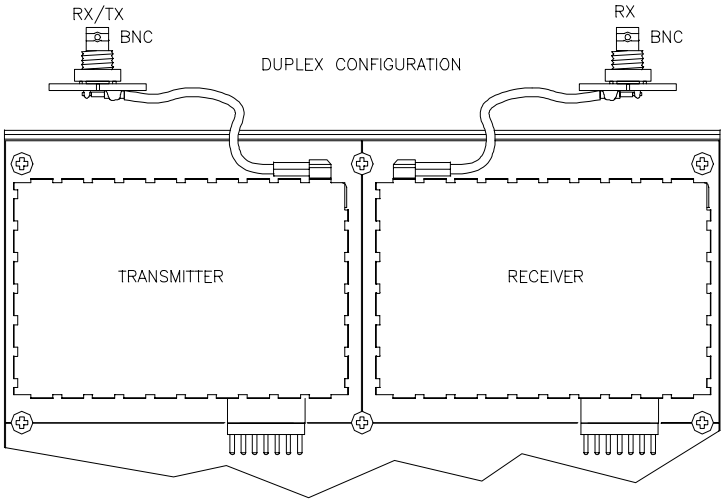

4.3 MEMORY EXPANSION CARD

4.3.1 MEMORY EXPANSION & PROGRAMMING PORT

JP5 is the memory expansion and processor programming port. This port is used during production to download the firmware into the processor's flash memory. Once programmed the 4 jumpers are installed linking **1-2, 3-4, 5-6 & 10-11** for normal operation.
Should the memory expansion card be required, the links are removed and the card is plugged in their place.

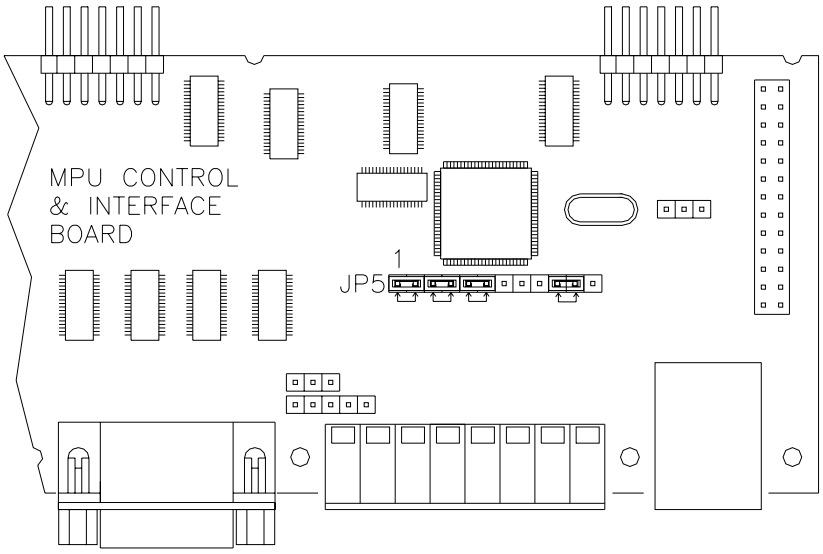

4.3.2 EXPANSION MEMORY CARD

The expansion memory card contains FLASH ROM, RAM and a control PIC processor, it can be used for three different functions as outlined below:

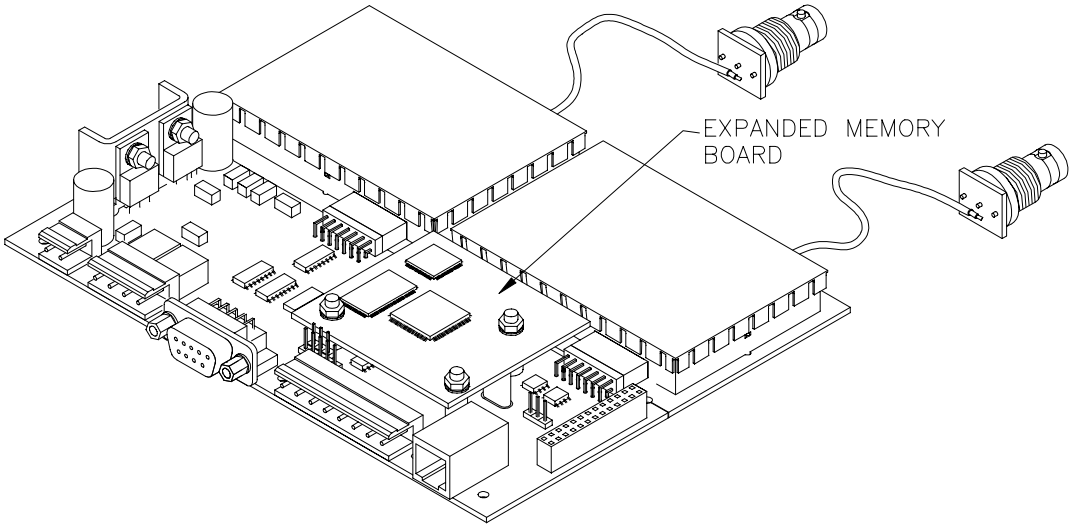

4.3.2.1 Firmware download tool

During production or firmware changes, the card can be loaded with the required firmware and plugged into the port to transfer the new firmware upgrades or changes.

4.3.2.2 Additional memory

The processor has 128K of memory from which it executes its program which is plenty for most applications. If insufficient memory is available the card can provide additional memory of up to 512k, programs can then be downloaded and interchanged as required.

4.3.2.3 Remote firmware download module

The programmable parameters of the radio are stored in EEPROM and can be changed via the serial port or over the air. However, should new firmware be required it normally involves changing out OTP's or memory devices. The Flash memory device in the ART allows upgrades or changes to be easily achieved, simply by over writing the memory. Unfortunately the processor cannot over write its own flash memory while still being in operation so the memory board is used to store new firmware and under the control of an on board PIC processor will down load the new code safely to the main flash processor.

Upgrades can take place over the serial port or over the radio link which is a very desirable feature for large networks, as all changes can take place from the base controller, with out site visits.

4.4 RS232 & 5VTTL SERIAL INTERFACE

The ART400 serial port can be programmed to operate at speeds between 150 – 38400bps and is used to program the modem, control the modem during testing and for transferring data over the radio link when in operation.

Internal links can be set to provide full RS232 or 5V TTL signal levels, either mode can be run true or inverted. Unless otherwise specified the product is shipped set for "True RS232" operation. Should these parameters need to be changed, the following can be used as a guide.

JP11 Leave open or link 2-3 for inverted signal (normal)
Link 1-2 for non-inverted

JP12 For RS232 serial without DTR Shutdown link 2-3
For RS232 serial with DTR Shutdown link 1-2
For 5V TTL serial link 4-5

Note: the –5V generator for the RS232 interface is turned off if 5VTTL is selected, and also while DTR is inactive if the DTR shutdown link option is enabled. The latter option is complemented by the software DTR shutdown option which causes the processor to shut down all the radio circuits while DTR is inactive. For lowest current consumption both options must be enabled.

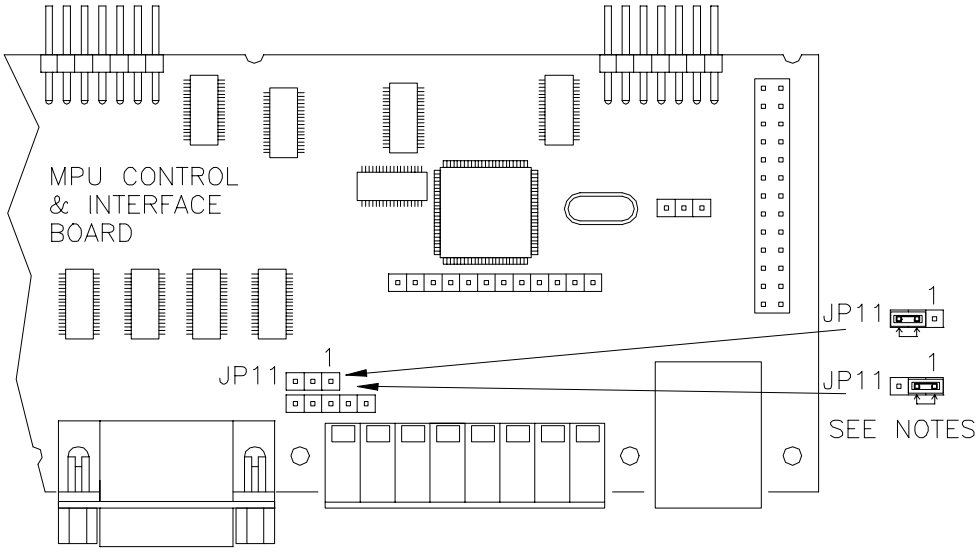

4.4.1 RS485 CONNECTION

For RS485 and RS422 an external adaptor is required, information is available from the sales office

4.4.2 Serial Port Pin Connections

The ART Series is equipped with a 9 way D connector for all serial port connections, the pins of this connector are allocated as follows:

Pin No.	Description
1.	DCD: Data Carrier Detect
2.	RXD: Receive Data
3.	TXD: Transmit Data
4.	DTR: Data Terminal Ready
5.	GND: GROUND
6.	DSR: Data set ready
7.	RTS: Request to send
8.	CTS: Clear to send
9.	RI: Ring Indicate

4.4.3 ADDITIONAL SERIAL PORTS

Should additional serial ports (RS232,485 or 422) be required, adaptors are available to convert the I2C Bus to the meet the client's requirements.

4.5 12VDC POWER

A nominal 12VDC (9.6 – 15VDC) is supplied to the unit via a 2 way pluggable terminal block, the polarity is marked on the front panel and the plug has a polarity key to prevent accidental polarity reversal. In the event of a polarity reversal the circuit board is protected by diodes and fuses.

4.6 I2C INTERNAL & EXTERNAL BUS

The ART Series features an I2C Bus which is used to communicate with other modules over short or medium distances. The main feature of the bus is its address mode, which will only wake up modules that are being addressed, thereby ensuring low power operation.
At the time of writing this manual a full range of analogue and digital I.O. modules are under development, a list of them are in the specification section, with further details available from the sales office.

RJ45 Connector

Pin No.	Description
1 & 2	Nominal 12VDC direct feed via a fuse & Over voltage Protection
3 & 4	N/C
5	SDA I2C Data Line
6	SCK I2C Clock Line
7	I.O. Reset
8	I.O. Interrupt
9 & 10	Ground

4.7 SWITCHES

The two front panel BCD switches select channels, or if both are set to zero program mode is entered. When viewing an ART with the aerial connector(s) at the top the left hand rotary switch is the "tens" switch and the right is the "units" switch, thus to set channel 37 set the left switch to 3 and the right to 7.

4.8 PROGRAMMING

Apart from the following internal Link selectable options; single/dual antenna selection

RS232/5VTTL selection with normal or reversed operation, all the parameters of the ART Series can be programmed via the serial port using either DOS or Windows 95/98 based software or over the radio link via the ART's secure "over air programming mode". The individual program can be stored on disc for future use or printed. Full details of all the programmable parameters are covered in the Programming section 7.

4.9 CHANNEL SELECTION

The ART Series can be PC programmed with up to 80 discrete channels. Alternatively, complete band allocations like the UK MPT1329 and MPT1411 bands can be downloaded from the PC software, provided of course that the channels are within the products tuneable bandwidth. Once programmed, channels can then be selected via rotary switches on the front panel,. via the keypad on the display version , from a PC program via the serial port or over the radio link.

4.9.1 PROPOSED UK MPT1411 BAND CHANGES.

The ART400 has been designed to cover both the old band plan and the new proposed band plan. When programmed with the MPT1411 band, channel selection can take place on the front panel via the 2 BCD switches over the radio link.

After the products have been deployed in the field the new channel band plan can be remotely programmed into the ART400 over the radio link. The channel switch setting will remain the same with the same channel number active. However, if a different channel number is required it can be remotely programmed over the radio link.

4.10 CONTROL INTERFACE

The 8 way control interface is a pluggable terminal block that provides the remaining signal connections, these are the un-calibrated RSSI voltage output, drives for external transmit and carrier detect LEDs, two digital inputs and two digital outputs. One of the digital inputs (DI0) is used for keying the transmitter when it is programmed for external audio operation with the TOX (tone operated switch) turned off. The individual connections are marked on the front panel.

Pin No.	Description
1	Ground
2	RSSI The RSSI signal is represented by a voltage from 0-5VDC
3	TX LED The anode of a transmit LED may be connected to this pin and its cathode should be connected to ground, the LED supply current will be approximately 3mA so a low current LED should be used. The LED will illuminate whenever the CMD400 enters transmit mode.
4	BUSY LED The RX LED connects in the same way as the TX LED above and provides an indication of carrier detect.
5	DI_0/TXe Digital input 0 (0 – 30VDC) or TX enable in Audio mode
6	DI_1 Digital input 1 (0 - 30VDC)

7	DO_0 Digital output 0, open collector, (0-30V) with the ability to sink 1Amp
8	DO_1 Digital output 1, open collector, (0-30V) with the ability to sink 1Amp

4.11 RF POWER:

The ART'S are available in two power ranges: 10mW to 750mWfor ultra low power requirement, and 50mW to 5 Watts. During factory alignment testing, the DC level produced by the MPU to select the power level is calibrated against a power meter and then any power level can be mathematically calculated by the MPU.
The calibrated RF power level is PC and over air programmable directly in watts & milli-watts with an accuracy of +/-1dB. For high power 1W – 10watts or 5W-25Watts a DIN power amplifier is available.

4.12 EXTERNAL AUDIO & MODEM INTERFACE

A 4 way pluggable terminal block is provided for the connection of external audio signals, these are connected via internal 600 ohm isolating transformers inside the unit. The connection details are marked on the front panel of the radio. The selection of internal modem or external audio operation is made at the time of programming the ART. If programmed for external audio the signal path can be programmed for Flat or a pre/de-emphasised response (for compatibility with older systems) and input/output levels can be adjusted from a connected PC during programming over the range of +3dBm to -20dBm (unless otherwise requested the factory set-up is –13dBm) into 600 ohms.
The external RX audio can be programmed for muted or non muted operation in the absence of a carrier.

Pin No.	Description
1 & 2	Balanced 600 ohm audio output
3 & 4	Balanced 600 ohm audio input

4.12.1 KEYING THE TRANSMITTER IN AUDIO MODE

In the external audio mode there are two options for keying the transmitter; first using digital input 0 (marked DI0/XPTT on the front panel), or secondly by using the tone operated switch (TOX). The TOX can be programmed to key on the detection of either V23 mode 2 or Bell 202 tones. Other tone sets can be provided for, by special order. For further information, please see section 5.0

It should be noted that the external audio path is AC coupled and so is not suitable for GMSK or multi-level signalling at baud rates above 2400 baud.

4.13 INTERNAL MODEM

The internal modem can operate at speeds between 150 and 9600 baud, at speeds up to 1200 baud FFSK signalling is used with either Bell 202 or V23 mode 2 tone sets. 2400 baud uses a 1200/2400 Hz coherent FFSK tone set, 4800 baud uses GMSK, and 9600 baud uses four level FSK with the programmable option of adding forward error correction at 9600bps.
All of these tone sets with the exception of 9600 baud are compatible with the Communique (PACSCOM) CMD400 radio, with V23 & BELL202 compatible with many older systems from other manufacturers. For further information, please see section 6.0.

4.14 FORWARD ERROR CORRECTION

When forward error correction is switched off the radio signal employs a standard asynchronous format using a start bit, 7 or 8 data bits, odd, even or no parity, and 1 or 2 stop bits. If this format is

programmed to match the serial port and runs at the same speed there is no overhead, data is transmitted over air at the same speed as it is received at the serial port. The exception to this is a radio baud setting of 9600 baud, where an extra eight synchronisation bits are sent after every 8 data bytes. For a data format of 8 bits, no parity and 1 stop bit this represents a redundancy of 9%.

Forward error correction (FEC) is a programmable option at speeds of 9600 baud. When forward error correction is switched on the radio signal changes to a fixed format where 14 bits are used to convey every data byte. The 14 bit words comprise of 8 data bits with 5 CRC bits used to perform error correction, and one flag bit used to differentiate control and data functions in messages. An additional 14 bit frame synchronisation word is sent after every 8 data words. For a serial port data format of 8 bits no parity this represents an increased redundancy of 28% over the 9% redundancy when FEC is disabled.

The CRC used in the forward error correction system has been optimised to detect and correct errors in the modulation scheme employed by the 9600 baud encoder. It is aimed at improving performance in weak signal conditions, rather than recovering data in fades or burst error conditions. The latter requires data interleaving and packeting that can result in large frames for small amounts of data, and hence unpredictable message lengths.

The improvement in error rate when using FEC is reduced as the initial error rate gets worse. For example an initial error rate of $1x10^{-4}$ is improved by a factor of 2000 to $5x10^{-7}$, whereas an initial error rate of $1x10^{-3}$ is only improved by a factor of 250 to $4x10^{-5}$. In terms of receiver sensitivity the $1x10^{-6}$ error rate threshold is moved down by 0.4uV (or 6.4dBm) when FEC is switched on.

4.15 SQUELCH TAIL (DRIBBLE BITS) ELIMINATION

The "EDIT MODEM/INTERFACE" menu of the A4P set-up programme includes a field entitled "MESSAGE PACKETING". If this option is turned on radio messages are framed with special control characters, if the "INTERFACE PROTOCOL" option is set to "NONE" only two characters are used, one to identify the start of the message, and one to identify the end. This allows the random characters that sometimes appear at the end of messages (called the squelch tail or dribble bits) to be eliminated. Note that once this option is enabled the radio signal is no longer compatible with other manufacturer's systems, or with other ART radios in which the option is disabled.

4.16 STATUS LED's:

The ART has 11 LED's to enable the operator to see at a glance the status of the product and the serial port in operation or on test, these are:

RX	RF Carrier Detect/Busy
TX	Transmit
SYS	System
RTS	Request to Send
CTS	Clear to Send
DCD	Data Carrier Detect
RXD	Receive Data
TXD	Transmit Data
RI	Ring Indication
DSR	Data Set Ready
DTR	Data Terminal Ready

4.16.1 SYSTEM LED

With the Exception of the System LED the remainder are self explanatory
The System LED is used as a quick check as to the status of the Radio Modem and if any errors are detected it will flash out an Error number

4.16.2 ERROR NUMBER

The modem reports errors in two ways, firstly the BUSY led will come on and the SYS led will flash a number of times, the BUSY led will then go out again and if the fault persists the procedure will be repeated. An error number can be determined by counting the number of times the SYS led flashes while the BUSY led is on. Alternatively the error can be read by monitoring the serial port using a PC comms program running at 9600 baud, 8 data bits, 1 stop bit and no parity. An "E" is output followed by the error number. Error numbers for both modes are as follows;

ERROR No	*FAULT*
1	Position of the channel switches has changed.
2	A channel has been loaded that has no RX frequency programmed.
3	Transmission has been attempted on a channel that has no TX frequency programmed.
4	The receiver synthesiser phase locked loop has failed to lock due to bad channel data or programming of an out range frequency.
5	The transmitter synthesiser phase locked loop has failed to lock due to bad channel data or programming of an out range frequency.
6	The contents of the microprocessor's EEPROM are corrupted (failed checksum) in the general program area.
7	Internal comms with a high power amplifier have failed.
8	The contents of the microprocessor's EEPROM are corrupted (failed checksum) in the calibration area.
9	The contents of the microprocessor's EEPROM are corrupted (failed checksum) in the factory program area.
10	The programmed R.F. power setting is out of range.

4.17 TIME-OUT-TIMER

The time-out timer allows the maximum continuous transmission time to be set in order to prevent channel blocking due to a host fault. The timer works in all modes (external/internal modem) and is programmable in one second steps between 0 and 255 seconds. In all cases transmission will cease until the action that normally causes transmission is removed and then re-applied. More explicitly; in external modem mode the transmit enable line (DI0) must be released and then lowered again, in internal modem modes with RTC/CTS handshake enabled RTS must be dropped and then raised again, or if handshake is not enabled character transmission must be suspended for at least two character periods at the serial port baud rate. In all modes the modem's SYS led is flashed at least twice when time-out occurs, the flashing continues while lockout is in force. The lockout timer is disabled if

the lockout time is set to 0. The lockout timer can be operated in "resettable" or "cumulative" mode, in resettable mode the timer restarts each time a transmission is made, in cumulative mode the timer counts up during transmit, and down during receive. If the timer counts up to the lockout time during transmit lockout occurs, this will eventually happen if the radio spends more than half of its time transmitting. Lockout in this mode is indefinite and can only be reset by powering the radio off.

4.18 POWER CONSUMPTION

The ART is a very low power product and is ideal for operation from batteries with solar power backup. The information below is intended to help the user decide on the best battery and solar cell size for operation at non powered sites.

4.18.1 RECEIVE MODE:

Duplex of fast simplex mode the transmitter synthesiser is on during RX and hence the unit will consume more current, typically 100mA.

In the normal simplex mode or when power save has been selected the TX circuitry is switched off during receive and hence the current reduces to less than 70mA

4.18.2 POWER SAVE MODE:

During the power save mode the standby current reduces to less than 150uA

4.18.3 TRANSMITTER RF POWER VERSES CURRENT

5Watt ART400TR-5

TX Power	5W	4W	3W	2W	1W	500mW	200mW	100mW	50mW
Max. Current	2.1A	1.8A	1.6A	1.3A	950mA	675mA	500mA	390mA	300mA

1Watt ART400TR-1

TX Power	750mW	500mA	250mW	100mW	50mW
Max. Current					

4.19 POWER SAVE MODE:

The ART is equipped with an internal and external power save mode. These are outlined below:

4.19.1 INTERNAL POWER SAVE

The internal power save facility: In this mode the microprocessor switches the transceiver off and after a pre-programmed time (Save on time) switches the unit back on (Save off time). If a carrier is not detected then the transceiver again switches off. If during the time the transceiver is awake a carrier is received, the unit will stay on. After the carrier drops out the receiver will stay on until the programmed resume time elapses. Once the resume time has elapsed the unit will return to its power

save mode. The Save On/Off and Resume time are all programmable via the PC program. Obviously the amount of power saved increases with the programmed save on/off ratio, however with power save enabled long lead times must be programmed to wake up the unit before communication can take place. Therefore it may not be possible to run all applications under the power save mode due to the turn around times required by the host system. In some circumstances it is possible to achieve power save and fast polling: If polling of all outstations is carried out in cycles with a reasonable gap between each cycle, a long initial poll can be used to wake up all stations, the resume timer will then restart each time an outstation is polled allowing fast access, when the cycle is complete all stations will return to power save after the resume time has expired.

4.19.2 EXTERNAL POWER SAVE

The External power save mode: Under this mode the on/off ratio is controlled externally via the DTR line (DTR shut down must first be enabled using the set up program). In this mode more of the modem's circuits are shutdown (including the microprocessor), this saves more power but care must be taken to ensure that the modem is enabled when a transmission is to take place. Note that there is a hardware link option to allow the serial port to shut off when DTR is not active, this allows the radio current to be reduced to its bare minimum. In applications where DTR is not connected this link option must of course be disabled.

4.20 "RSSI" RECEIVE SIGNAL STRENGTH INDICATION

Each ART produces an internal DC signal which is proportional to the received signal strength. The DC signal is passed to the internal MPU where it accurately measures it's value by an internal A-D converter. The proportional DC voltage is individually calibrated against a signal generator in production and levels are mathematically calculated for accurate measurement in the field. The signal strength can then be read in dB micro volts on a PC connected to the serial port or remotely over the air. In the case of the LCD version the level can be directly read from the display. Alternatively the raw 0-5VDC relative to the RSSI is available on one of the connectors.

Typical DC voltages verses Signal levels is shown below

SIG.	.3uV	.35uV	.5uV	.8uV	1uV	2uV	3uV	4uV	5uV
DC.V	1.25	1.28	1.35	1.44	1.49	1.66	1.75	1.80	1.88

4.21 TEMPERATURE MEASUREMENT

Within the ART is a thermistor which in turn is connected to an A-D on the processor.
This is used to measure the internal temperature of the module and to compensate for temperature changes. The temperature in deg.C/F is available via a connected PC or over the radio link via the network management software.

4.22 INPUT VOLTAGE MEASUREMENT

The input supply to the ART is monitored via an A-D on the processor and the actual voltage can in be read from a connected PC or over the radio link via network management software. This facility is very useful for checking battery voltages and trends at battery powered outstations.

4.23 FREQUENCY OFFSET MEASUREMENT & RE-ALIGNMENT

The network management software, enables selected outstations/repeaters or all outstation's and repeater's within a system to have the frequency of the receiver and transmitter checked against the base station and any offset flagged as a percentage.
The decision can then be made to press the auto re-alignment button that will align all the outstations and repeaters to the frequency of the base station and flag up the new offset percentages, which should be very near to Zero.
This facility is designed to minimise the effects of long term drift or can be used to individually re-align an outstation should there be large environmental differences, for example. the base station is +50 deg and the outstation is at –30deg. While it will still work the performance could be improved if the two were locked.

4.24 EXTERNAL I.O

The ART is equipped with two digital inputs and two digital outputs that can be accessed via the management software. The inputs & outputs are protected to 30VDC with the outputs capable of sinking up to 1Amp. For further analogue or digital I.O. refer to the I.O.
section of the manual.

4.25 REAL TIME CLOCK

The ART product has an on-board real time clock and although it is not used in the current configuration it can be used for specific timed wake up calls etc. in custom applications.
Re- synchronisation can take via the I2C port, RS232 or over the radio link.

4.26 DUAL CONTROLLER FOR A FULLY DUPLICATED OUTSTATION:

For Base Station applications the XRT9000 Series is available with the option of full duplication. However, the ART products can also work in a fully duplicated mode
as base stations or outstation applications with the aid of an ART790 DIN baychanger module.

5

ANALOGUE MODES OF OPERATION

5.0 INTRODUCTION

In addition to the serial data path the ART series has a 2/4 wire audio interface for external modem connection for use with older systems that employ private wires with external V23 or Bell 202 modems. It is also possible to use this analogue path for speech with the connection of an external microphone and speaker amplifier for setting up links etc. .

It should be noted that the external audio path is AC coupled and so is not suitable for GMSK or multi-level signalling at baud rates above 2400 baud.

5.1 EXTERNAL AUDIO & MODEM INTERFACE

A 4 way pluggable terminal block is provided for the connection of external audio signals, these are connected via internal 600 ohm isolating transformers inside the unit. The connection details are marked on the front panel of the radio. The selection of internal modem or external audio operation is made at the time of programming the ART. If programmed for external audio the signal path can be programmed for flat or a pre/de-emphasised response, for compatibility with older systems. The input/output levels can be adjusted from a connected PC during programming over the range of +3dBm to -20dBm (unless otherwise requested the factory set-up is –13dBm) into 600 ohms.

The external RX audio can be programmed for muted or non muted operation in the absence of a carrier.

5.2 4/2 WIRE INTERFACE CONNECTIONS:

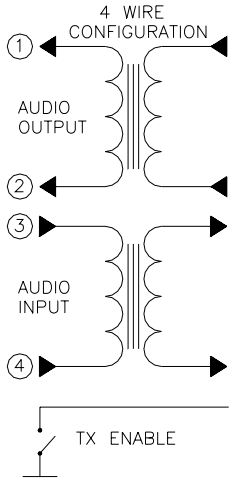

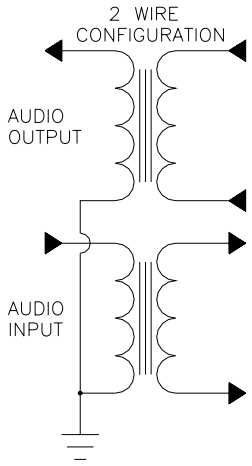

Pin No.	Description
1 & 2	Balanced 600 ohm audio output
3 & 4	Balanced 600 ohm audio input

5.3 KEYING THE TRANSMITTER IN AUDIO MODE

In the external audio mode there are two options for keying the transmitter; first using digital input 0 (marked DI0/XPTT on the front panel), or secondly by using the Tone Operated Switch (TOX). The TOX can be programmed to key the radio on detection of either V23 mode 2 or Bell 202 tones. Other tone sets can be provided for, by special order.

5.4 EXTERNAL MODEM CONNECTION VIA A PRIVATE OR PSTN LINE

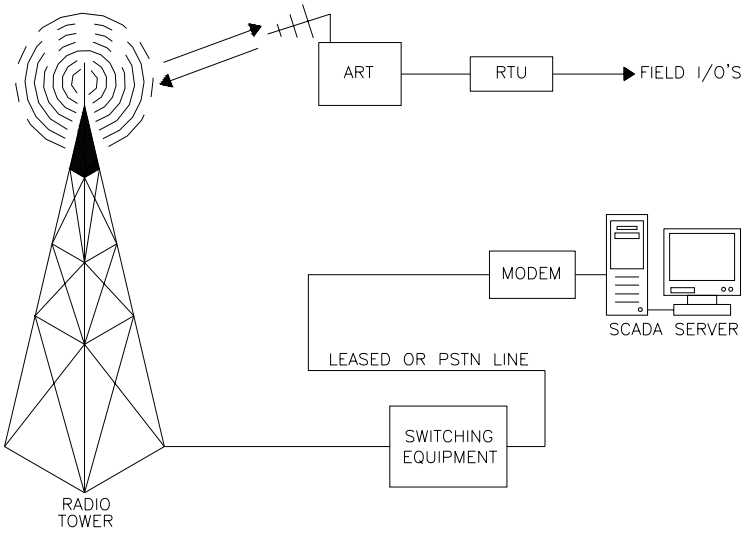

5.5 PROGRAMMABLE AUDIO PARAMETRS:

5.5.1 INTERFACE & MODE

The Audio Mode selects the interface and path of the signals within the ART and when the 2/4 wire port is used, it should either be set for :

5.5.1.1 Ex Audio-PTT

Selects the 2/4Wire Audio interface and external PTT (TX Enable) and routes the audio via internal level amplifiers to & from the transmitter & receiver modules respectively.

5.5.1.2 Ex Audio-TOX

This is the same as the EX AUDIO-PTT but routes the audio input via a Tone Operated Switch (TOX) which can be set to detect V23 or BELL202 formats. Detection of the selected format will key up the transmitter and forward the incoming data. It should be noted that a pre-amble of 10-15milli-seconds duration consisting of data, single tone or alternating will be required so the decoder can lock on and activate TX enable.

5.5.2 FFSK TONE SET

In EX AUDIO-TOX the ART can either be set to detect incoming V23 or BELL202 tone sets.

5.5.3 LINE LEVEL:

The interface level is normally factory set for –13dBm, but can be adjusted between –20 to +3dB from the CALIBRATE MENU by following the instructions..

5.5.4 AUDIO RESPONSE

This option sets the response of the receiver's and transmitter's audio path to either flat or de-/pre-emphasised. When de-/pre-emphasised is selected a 300Hz low pass filter is switched in on the RX path.

5.5.5 CARRIER MUTE

The receive audio path can be set to mute when no incoming carrier is detected if this option is turned on.

5.5.6 LEADOUT DELAY

The lead out delay is the time the transmitter stays up after the audio data finishes, this is to avoid mute noises that could corrupt data that is not framed, packeted and does not have an end of message character. This is programmable between 0 & 256milli seconds

5.5.7 TIME-OUT-TIMER

The time-out timer allows the maximum continuous transmission time to be set in order to prevent channel blocking due to a host fault. The timer works in all modes (external/internal modem) and is programmable in one second steps between 0 and 255 seconds. In all cases transmission will cease until the action that normally causes transmission is removed and then re-applied. More explicitly; in external modem mode the transmit enable line (DI0) must be released and then lowered again, in internal modem modes with RTC/CTS handshake enabled RTS must be dropped and then raised again, or if handshake is not enabled character transmission must be suspended for at least two character periods at the serial port baud rate. In all modes the modem's SYS led is flashed at least twice when time-out occurs, the flashing continues while lockout is in force. The lockout timer is disabled if the lockout time is set to 0. The lockout timer can be operated in "resettable" or "cumulative" mode, in resettable mode the timer restarts each time a transmission is made, in cumulative mode the timer counts up during transmit, and down during receive. If the timer counts up to the lockout time during transmit lockout occurs, this will eventually happen if the radio spends more than half of its time transmitting. Lockout in this mode is indefinite and can only be reset by powering the radio off.

5.5.8 POWER SAVE MODE:

The ART is equipped with an internal and external power save mode. These are outlined below:

5.5.8.1 Internal Power Save

The internal power save facility: In this mode the microprocessor switches the transceiver off and after a pre-programmed time (Save on time) switches the unit back on (Save off time). If a carrier is not detected then the transceiver again switches off. If during the time the transceiver is awake a carrier is received, the unit will stay on. After the carrier drops out the receiver will stay on until the programmed resume time elapses. Once the resume time has elapsed the unit will return to its power save mode. The Save On/Off and Resume time are all programmable via the PC program. Obviously the amount of power saved increases with the programmed save on/off ratio, however with power save enabled long lead times must be programmed to wake up the unit before communication can take place. Therefore it may not be possible to run all applications under the power save mode due to the turn around times required by the host system. In some circumstances it is possible to achieve power save and fast polling: If polling of all outstations is carried out in cycles with a reasonable gap between each cycle, a long initial poll can be used to wake up all stations, the resume timer will then restart each time an outstation is polled allowing fast access, when the cycle is complete all stations will return to power save after the resume time has expired.

5.5.8.2 DTR Shutdown

The External power save mode: Under this mode the on/off ratio is controlled externally via the DTR line (DTR shut down must first be enabled using the set up program). In this mode more of the modem's circuits are shutdown (including the microprocessor), this saves more power but care must be taken to ensure that the modem is enabled when a transmission is to take place. Note that there is a hardware link option to allow the serial port to shut off when DTR is not active, this allows the radio current to be reduced to its bare minimum. In applications where DTR is not connected this link option must of course be disabled.

6

DIGITAL MODES OF OPERATION & PROTOCOLS

6.0 DIGITAL MODES OF OPERATION & PROTOCOLS

This section serves as a guide to the various ways the ART Series can transfer digital information via its serial port in point to point links, point to multi-point (scanning telemetry) systems and networks employing store and forward and repeater nodes.
Due to the exceptionally large flash memory space available within the ART, we are able to support various PC selectable modes of operation to suit many different applications.
At the time of writing this manual, Transparent mode, Hayes "AT" and MODBUS and RFT Routing Modes are supported, with DNP3, IEC870 and MX25 modes under development. The basic modes of operation of the radio modem are outlined below.

6.1 SERIAL INTERFACE & TRANSMISSION

The serial interface can be programmed either to use RTS/CTS handshaking to initiate transmission, or to transmit whenever data is present at the serial input. In the latter mode CTS is still operated to implement flow control but can be ignored unless message sizes exceed 1k byte and the serial port baud rate is higher than the radio signal baud rate. These handshaking modes are compatible with the old Communique CMD400 modes A, C and D. Mode B (byte stuffing mode) is not supported.

6.1.1 TRANSMISSION USING RTS/CTS HANDSHAKING

If handshaking is enabled transmission is started by operating RTS, CTS can then be monitored for flow control purposes. In the idle state CTS is inactive, when RTS is operated CTS will become active immediately and data may be input to the serial port, when all data has been loaded to the serial port RTS should be dropped, transmission will continue until all data in the serial input buffer has been sent, then CTS will become inactive and transmission will cease. During transmission the amount of data in the serial buffer is checked by the radio, if the buffer becomes ¾ full CTS is dropped to request the host to stop loading data, CTS is activated again when the buffer is reduced to ¼ full. To prevent timing problems data will still be accepted into the buffer when CTS is de-activated due to buffer filling during transmit, however any data received once CTS has dropped at the end of a transmission will be discarded, this prevents such data from being prefixed to the beginning of the next message.

6.1.2 TRANSMISSION WITHOUT HARDWARE HANDSHAKE

If RTS/CTS handshaking is disabled the radio will start transmission as soon as data is received at the serial port, transmission ceases as soon as the serial buffer has been emptied and a period equivalent to two characters at the radio signal baud rate has elapsed. It is important to note that since transmission ceases as soon as a two character delay in the incoming data stream is seen, data characters in a message must be presented in a continuous back to back stream.

In this mode CTS is still used to indicate the serial buffer fill level in the same way as described in the section on transmission using handshake, the difference is that in the idle state CTS is always active indicating readiness to accept data. In most applications CTS can be ignored as messages are likely to be smaller than the serial input buffer (1k byte), bear in mind also that if the radio baud rate and data format is the same as that configured for the serial port the buffer is being emptied as fast as it is being filled and so buffer overrun is unlikely.

6.1.3 DATA RECEPTION

Any data received by the radio is simply output to the serial port, the DCD line can be programmed to operate in three different modes to assist the host. Firstly by indicating that a carrier is detected on the radio channel, this is useful if a busy lockout function is required (although this can be dangerous if the channel is susceptible to interference as well as wanted signals), secondly DCD can indicate presence of a carrier and a valid data signal, data will normally be output under this circumstance, the third mode behaves in the same way as the second except that DCD remains active until all data has been output to the serial port after the signal has gone, this allows DCD to be used as a wake up signal.

6.2 TRANSMIT & RECEIVE TIMING

The ART is able to operate in full duplex, semi-duplex and simplex modes. In full duplex mode the radio can transmit and receive data at the same time, in order to do this the transmit and receive frequencies must be spaced sufficiently far apart to prevent the transmitted signal interfering with received signal.

Semi-duplex mode is similar in that two well spaced frequencies are used but data is only sent in one direction at a time, radios that do not have separate synthesisers for transmit and receive cannot operate in full duplex mode, they can operate in half duplex mode but must reload their synthesiser when changing direction, the ART does not have this limitation as it is equipped with two synthesisers.

In simplex mode the same channel is used for transmit and receive, the radio synthesiser must be reloaded whether one or two synthesisers are fitted. Radios with one synthesiser must reload to account for the I.F. offset used by the receiver, radios with two synthesisers must reload to prevent leakage from the transmitter blocking the receiver.

The time taken to switch from receive to transmit and vice versa is the same on the ART for full duplex and half duplex modes, in fact the radio does not differentiate between them. In simplex mode this time is increased because of the synthesiser reload and lock times.

In order to reduce adjacent channel interference in line with ETS300-113, the power output from the transmitter has finite rise and fall times, a distant receiving radio will therefore see an incoming signal later than a nearby one. The receiving radio also requires time for the carrier detect circuit to operate and for the modem to lock on to the incoming audio signal.
If running in full duplex mode these are the only timing considerations required and can be catered for using the programmable "lead in delay", the major part of the time is required for the modem to lock on to the incoming data stream and this is dependant on the radio signal baud rate. Minimum timings are given below:

Baud Rate	Lead in Delay
150	80ms
300	60ms
600	40ms
1200	40ms
2400	40ms
4800	20ms
9600	30ms

For a two frequency simplex (Semi-duplex) or a duplex channel, the TX & RX synthesisers remain loaded and hence there is only the TX rise time to consider. If single frequency operation is required additional time is required for the transmit synthesiser to be loaded and locked prior to transmission and to be shifted away from the receive channel when transmission ceases. This timing constraint is important when deciding how soon after receiving a message a reply may be sent. For single frequency operation the ART is ready to receive data approximately 25ms after transmission ceases. It is therefore necessary to either wait this length of time after receiving a message before sending a reply or to extend the lead in delay by the same amount to hold off transmission of the data.

For applications where power save is in use the lead in delay should be extended to allow the receiving device to wake up. The time required can be calculated by adding the save on time to the save off time and adding 10 percent, e.g. for a save on time setting of 800ms and a save off time of 200ms the lead in delay should be 1100ms.
Care must be taken when replying to a previously transmitting ART when RTS/CTS handshake is not being used, in this mode the transmitting device will wait for two character times before turning off its carrier and may therefore miss the beginning of a reply if it comes too soon, this may be overcome

either by imposing an additional two character delay in the controlling device or by extending the lead in delay by that amount.

The ART also has a facility for imposing a lead out delay, this is the time that the carrier remains on after transmission of the message is complete, this delay can normally be left at zero, it is only of use where a controller makes use of the DCD signal to suppress data processing but suffers some delay in processing received data.

6.2.1 RECEIVE TO TRANSMIT SWITCHING TIME

When using the internal modem the action that initiates transmission can be either receipt of a character at the serial port or the operation of RTS. These examples use the first mode. The radio does nothing until the stop bit of the first character for transmission has been received, the transmitter is then started:

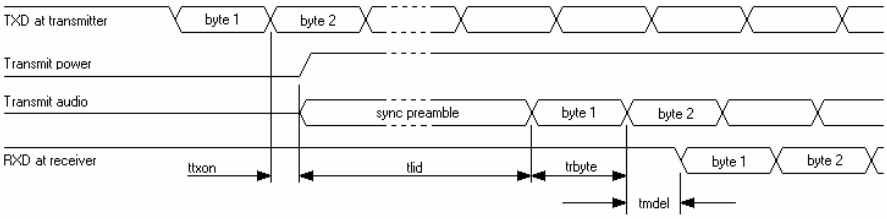

The time delay between receipt of the stop bit for the first character to be transmitted at the transmitting radio and output of the start bit of that character at the receiving radio is the sum of the values ttxon, tlid, trbyte, and tmdel shown in the diagram above. Values for these parameters are indicated below:

TABLE A: Timing values for duplex and simplex modes are as follows:

symbol	description	duplex	simplex
ttxon	Time from external action to commencing transmission	1.3ms	9ms
tlid	Duration of synchronisation transmission (lead in delay)	Table B	Table B
trbyte	Duration of 1 byte at radio signal baud rate	Table C	Table C
tmdel	Modem decode latency	Table D	Table D

TABLE B: The lead in delay is a programmable parameter but minimum values dependant on baud rate must be adhered to. However, in a scanning system with the base station on continuous transmit the base station lead in delay can be set for Zero (thereby saving valuable time) as the internal outstation modems will always be synchronised.

Baud	150	300	600	1200	2400	4800	9600
Min tlid	80ms	60ms	40ms	40ms	40ms	20ms	30ms

TABLE C: The duration of a byte at the radio baud rate is dependant upon the data format employed, the table below assumes a format of one start bit, 8 data bits, no parity and 1 stop bit, i.e. a total of 10 bits per character. If another format is used the appropriate correction must be made.

Baud	150	300	600	1200	2400	4800	9600
trbyte	66.7ms	33.3ms	16.7ms	8.3ms	4.17ms	2.08ms	1.04ms

TABLE D: The modem decode latency takes into account delays introduced by hardware and software filters. The total delay is baud rate dependant:

Baud	150	300	600	1200	2400	4800	9600
tmdel	6.9ms	3.5ms	1.7ms	1.3ms	1ms	1ms	1ms

6.2.2 MESSAGE DURATION

The time taken to transmit a message can be simply derived by multiplying the number of characters in a message by the values given in table C making any appropriate corrections for data format. The exception is 9600 baud where extra synchronisation sent during the message must be taken into account, 8 synchronisation bits lasting a total of 0.833ms are sent after every eighth message character.

6.2.3 TRANSMIT TO RECEIVE SWITCHING TIME

In full or semi-duplex operation transmit to receive switching time does not need to be considered as the receive path is maintained during a transmission, in simplex operation some time must be allowed to reload the transmitter synthesiser to stop it from interfering with the receiver. The diagram below indicates the minimum time in which the radio is able to receive a signal after completing a transmission.

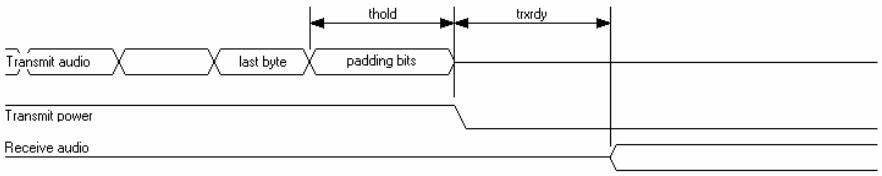

symbol	description	value
thold	Period for which carrier is held up after sending last data byte	2.5ms + LOD
trxrdy	Time to reload transmit synthesiser in simplex mode	6ms

During the time thold the radio transmits some padding bits to allow for propagation delays in the receiving device before shutting off the carrier, this prevents possible chopping of the message tail. The time thold is composed of a fixed 2.5ms period plus the programmable value LOD (lead out delay). LOD is normally set to zero. After the time trxrdy has expired the radio is ready to receive a new signal.

N.B. If RTS/CTS handshaking is not used the transmitter is turned on whenever data is received at the serial port, the transmitter is left on until all buffered data has been transmitted and no data has been input for a time equivalent to the length of two characters at the radio baud rate (refer to table C). In general data transmitted by the radio is delayed with respect to its receipt at the serial port by the receive to transmit switching time, if the
radio baud rate and serial port baud rate and both data formats are the same this delay remains constant throughout the transmission. At the higher baud rates this delay is generally greater than the length of two characters and so the procedure to stop transmission is started as soon as the last character has been sent, at the lower baud rates however it is possible that the time thold is extended while the radio waits for the two character timeout to expire, this can also happen if data characters are not loaded back to back into the serial port.

6.3 RADIO DATA FORMATS

The radio signal can be set up to operate using 7 or 8 bit data, 1 or 2 stop bits, and odd, even or no parity. This setting is independent of the serial port setup. This allows compatibility with other radios. The Communique CMD400 does not set these parameters independently, with one exception the radio signal format in this radio is set to be the same as that of the serial port even though the baud rates can be different. The exception is mode C where the radio signal format did not include parity, if compatibility with this radio is required parity must be disabled in the radio signal regardless of the serial port configuration. Later versions of the CMD400 had an additional mode entitled “mode C plus parity” in which parity was included, use of this mode did not give rise to the exception.

6.3.1 SYNCHRONOUS/ASYNCHRONOUS TRANSMISSION FORMAT

The radio signal format can be programmed for asynchronous or synchronous operation at baud rates up to 1200. At baud rates of 2400 or more operation may only be synchronous.

In synchronous mode inverted NRZI encoding is used where a one is represented by a transition in the binary data, every transmitted bit fits into a time slot defined by the baud rate, this allows a phase locked loop to lock on to the data stream to give better performance in noisy conditions, the inverted NRZI encoding allows this to continue even when the signal is idling sending stop bits. The inverted NRZI encoding gives a further advantage with GMSK signalling since the polarity of the signal is unimportant.

In asynchronous mode NRZ encoding is used where a "one" tone represents a binary one, and a "zero" tone a binary zero, whilst each character consists of bits of equal duration defined by the baud rate, the time between the end of a stop bit and a following start bit may be arbitrary. This prevents the implementation of a phase locked loop to improve signal to noise performance but does allow use within older systems that do not implement synchronous transmission or NRZI encoding.

6.4 OPERATING MODES

6.4.1 TRANSPARENT MODE

The radio has no knowledge of the data it is transmitting, data is simply transmitted and received under hardware control with the option of RTS control or initiation of transmit after receiving serial data, with CTS providing an optional flow control. This configuration is useful when expanding older systems where the radios must be compatible with others of

various manufacturers.

6.4.2 PROTOCOL SPECIFIC MODE

The radio recognises a complete frame and only transmits and receives data conforming to that format. No addressing of radios or routing of data is performed. Protocols such as MODBUS & DNP3 can be supported in this way.

6.4.3 ROUTING MODE

The radios recognise a protocol specific frame and the address to which the frame is to be sent. Routing information must be stored in each radio for each destination address that requires the use of repeaters or store & forward nodes. Any radio in the system can operate as a repeater/store & forward node. The radio does not perform any acknowledgement or retries. Any protocol using a fixed address field such as MODBUS, RFT ROUTING can be supported.

6.4.4 DIAL UP MODE

Hayes protocol is used to dial up the radio link which may include routing via repeaters or store & forward stations, the route information is not stored but is passed in the dial up command in the form of a telephone number, once the link is established it is transparent and so independent of the protocol being transported. This allows point to point protocols such as SLIP and PPP (and hence TCP/IP) to be conveyed. Dial up is less efficient for small data transactions because of the data exchanges carried out during the connect and disconnect phases.

6.5 APPLICATIONS

6.5.1 POINT TO POINT LINK

In the simplest of form of operation the ART series can be used as a point to point link where data is simply and quickly transferred from one location to another.
In this mode the ART can either operate transparently with data applied to the serial port or with RTS & CTS as a flow control. Alternatively the ART can be programmed as a Hayes compatible modem.

6.5.2 POINT TO MULTI-POINT (SCANNING TELEMETRY SYSTEMS)

The typical scanning telemetry system consists of a base station polling multiple outstations.
For greater data collection speeds the base station is normally operated in a full duplex mode with the transmitter permanently keyed, this eliminates the TX rise time and will keep the outstations modems synchronised so little or no pre-amble (lead-in time) is required.
For heavy scanning duty cycles (More than 70% TX) the ART can either be provided with larger heat sink or ART should be replaced with an XRT9000 19 inch rack mounted base station which is capable of 100% Transmitter duty cycle.

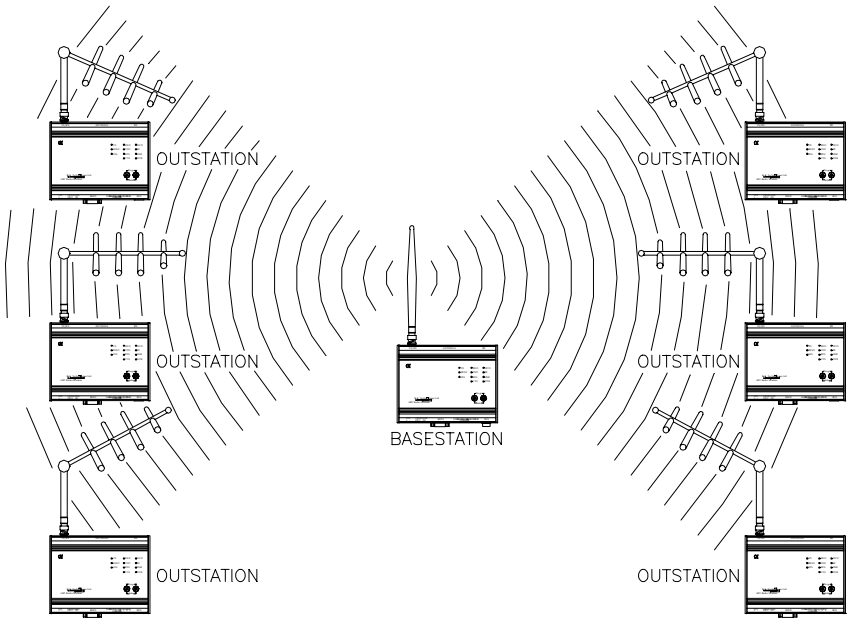

Typical Scanning network

6.5.3 REPEATER/STORE & FORWARD OPERATION

Once the system ceases to be point to point or point to multi-point because of range or terrain, different approaches have to be taken to suit individual applications. Some of these will involve the routing of data via "Repeater" or "Store & Forward" nodes, both these functions are outlined below.

A typical single unit "Store & Forward" Node

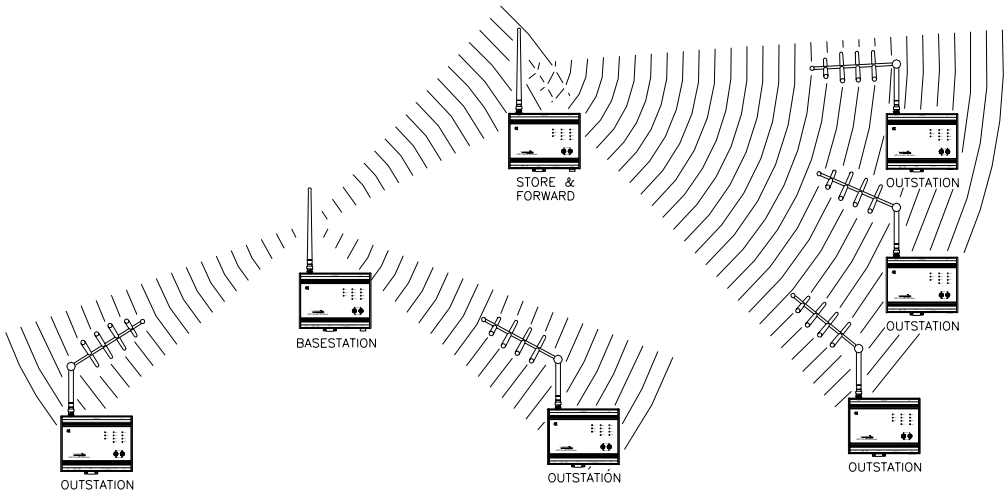

A Typical two unit "Store & Forward"/Repeater Node.

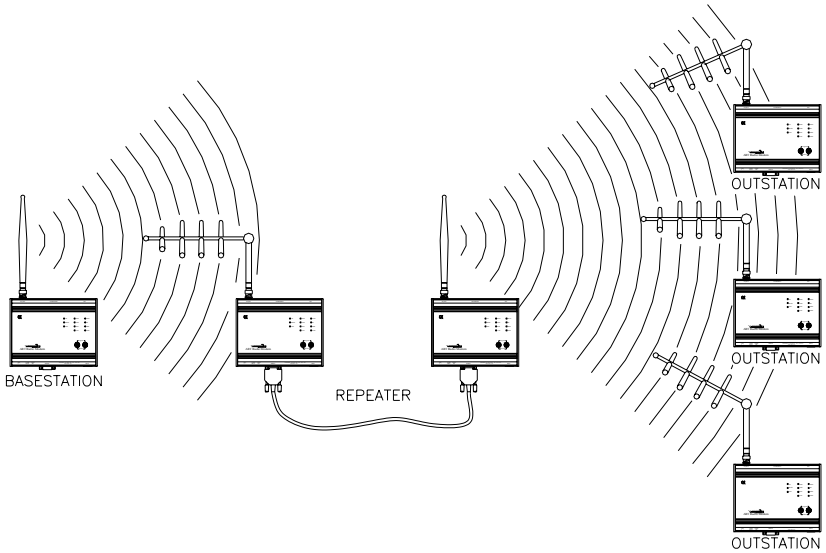

Two unit "Store & Forward" /Repeater with local RS232 connection

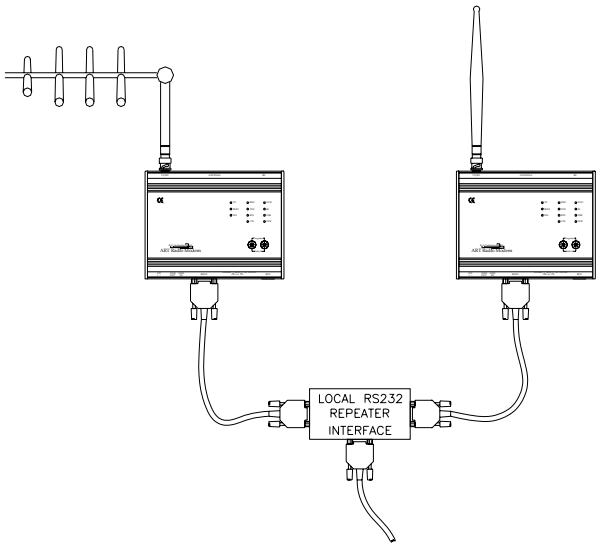

6.5.4 STORE & FORWARD

In its simplest form a Store and Forward (S&F) node can be used to extend the range of a point to point or point to multi-points with an ART acting as a store & forward or repeater node. ART series supports up to six repeaters within one link, although the more repeaters used the better signal strength is required between each link as there will be some accumulative degradation over the whole link.

6.5.4.1 Reporting by Exception:

Store & Forward also forms the basis for a routing network, where messages can start from any point in the systems, such a system if often known as "reporting by exception", where a change in parameters at a location (Node) is detected and the change is sent to the monitoring centre via preset or dynamic routing.

6.5.4.2 Single frequency simplex Store & Forward Operation

For systems using single frequency simplex channels, Store & Forward (S&F) is a method where the incoming message is stored and then re-transmitted is the only practical solution.

The incoming message is received by the S&F node and the address is checked against a list held in the S&F node's memory. If the address on the incoming message matches one on the ART's internal routing list, the MPU will key up the transmitter and pass the message on.
In a relatively simple S&F forward operation with only one repeater stage the address can be the final destination address. So for a signal to go from A – C via repeater B, the address header would be C. Repeater B would start to receive the message from A and would check the address C against the stored routing table. If it finds a match, the transmitter will pass on the message.

In a more complex system with multiple repeaters, A B C D the address can again be the final destination D and first repeater B will check the address and forward it on to the 2nd repeater C which

will in turn pass it on to D and so on. This is different from the Hays mode where the address route is in the message.

Depending on the application & software, all or some of the messages may be forwarded.
The longer the message and the slower the transmitter rise time the longer the delay. If duplex channels are used the re-transmission can start as soon as the address is checked long before the incoming message has been decoded, thereby saving valuable time.
For simple systems this method can produce a satisfactory solution as all the data the repeater receives will either be for the local site via the RS232 port or for onward transmission.

6.5.4.3 Multiple frequency simplex operation Relay

If the outgoing message channel at the S&F node is different from the incoming message channel, it is possible to receive the message, store it, change frequency and re-transmit it. The S&F node will then wait for a reply on the new channel and store it, change to the other channel and return the reply. It is obvious that there can be various timing problems with this set-up and a lot more time will be required, so a system supporting this mode of operation would be inherently slow. Further more, as there would have to be a default state for S&F node, calls could only be initiated from one direction. Hence, we do not support this mode of operation.
A better solution than using one ART is the use of two units connected together via a
S&F cable. When one unit receives the incoming signal, it buffers the message, turns on the other unit's transmitter and commences the transmission. The same applies in the opposite direction. There will be a time delay with this set-up, as the receiver has to detect the carrier and then turn on the other unit's transmitter. The advantages are; the receivers in both directions are always active and so either direction may initiate a call, and different antennas for each radio can be used to suite different applications and provide additional isolation.

6.6 STORE & FORWARD BASED ON A CLIENTS PROTOCOL.

A Store and Forward configuration can re-transmit all traffic it receives and in some applications where there may be only one repeater serving many outstations, this may be required. However, to conserve valuable air time and avoid the possibility of collisions due to coverage overlaps with other repeaters transmitting at the same time, normally only messages that require forwarding by specific repeaters are re-transmitted.
This is achieved by stripping out the addresses of incoming messages, comparing the address with the list of outstation addresses stored in the unit and only forwarding on those that match. However, this format requires knowledge of the client's message structure and where the address in the message can be found...
The other option is to route messages via the addresses embedded in the radios, using the AT Network mode.
In either option there is normally local communication at the store and forward site, via the RS232 port.

We have written various store & forward drivers to cope with a number of client specific message formats and are always happy to write new drivers as and when required, further information is available from the sales office.

6.7 REPEATER NODE

A repeater as opposed to a S&F node will have split receiver & transmitter frequencies with enough separation to enable simultaneous transmitter and receiver operation via two separate antennas, or one antenna with a duplexer.
The repeater will have same frequencies as the base and outstations, but reversed as outlined below.

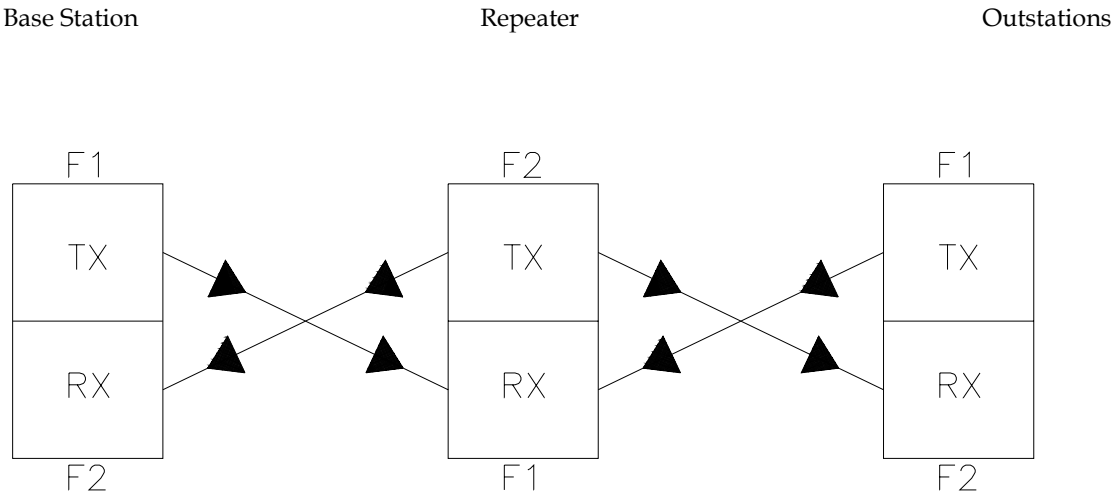

A signal received by repeaters receiver will trigger the transmitter and data will be passed on. If the protocol is known, it is possible to store addresses in the products memory and only pass on messages when there is match. However, this will require special software.

6.8 HAYES AT MODE

The ART series radios can be programmed to run a Hayes AT command set that allows dial up networking on a radio system with support for low power operation. Any radios in the system can be used as relays, and as routes are defined in the dial up command there is no need to store routing tables in the radios themselves. Remote programming is also enabled whenever Hayes At mode is enabled.

When "HAYES AT" mode is enabled in the "EDIT MODEM/INTERFACE" menu of the setup programme the "NETWORK ID" and "RADIO ADDRESS" fields must be filled out such that every radio in a system has the same network id, but a different radio address. Notes should be kept detailing the installation of radios and their addresses. It is also possible to set addresses by accessing the Hayes type "S" registers from the host equipment, this allows all radios to have the same setup and so to be interchangeable in the field.

6.8.1 AT COMMAND SUMMARY

Commands are not case sensitive, when entered from a keyboard the backspace key may be used to delete errors. Every command except the escape code (default +++) must begin with the AT prefix and be terminated with a carriage return. The maximum command line length is 40 characters. More than one command may be entered on a line and spaces may be entered between commands, only the first command on a line should be prefixed by "AT".

The following commands are supported, brackets indicate an optional parameter or character, the S registers referred to are used to store parameters relevant to this mode of operation, they may be also accessed using the PC setup programme:

AT — Attention. Required command prefix, except with the escape code (default +++), use alone to test for the OK result code.

D (rrr,rrr...)ddd — Dial. The optional relay addresses (rrr) and the destination address (ddd) should be entered as three digit decimal values in the range 001 to 255. Relay addresses must be entered in the order they will be encountered with the first relay address appearing immediately after the D character. Once entered the radio will attempt to establish a link through the relays with the destination.

For example;

ATD003 — Dial out directly to radio number 3

ATD001002003 — Dial out to radio number 3, using radios 1 and 2 as relays.

N.B. there are two special functions of the dial up command, these are effected by preceding the route with 8 or 9, both of these functions are used by diagnostics software and should not be used by the application.

O — Switch from command mode to transparent mode. Once transparent mode is entered no more AT commands will be interpreted, transparent mode is terminated with the escape code.

H — Hang up. The hang up command disconnects a link and should be issued to the radio through which the link was originally established using the dial command. If transparent mode has been entered the escape code must first be issued to return to command mode. Note that a faster disconnect is possible using the DTR hardware handshake line.

&V — View the settings of all of the S registers and also the error code reporting mode. The values in the S registers are loaded from Eeprom on power up or following a reset command, they may be subsequently modified using other commands, issuing "AT&V" views the active values held in volatile memory, not those stored in Eeprom.

&W — Write the active S register values to Eeprom. This causes the S register values to be preserved following loss of power or a reset.

Z — Software reset. The radio is re-initialised and the S registers are overwritten with the values stored in Eeprom.

Sr? — Display the value of S register r. For example issuing "ATS23?" displays the value of S register 23. The value r can be in the range 0 to 31.

Sr=n — Sets the value of S register r to the decimal value n. For example issuing the command "ATS23=34" sets S register 23 to 34 decimal. The value n may be in the range 0 to 255. The value r may be in the range 0 to 31, however not all locations are used, and some are read only. Attempting to write to an S register that is not used or that is read only causes the error result code to be returned.

V(n) — Sets verbal or numeric result codes. Result codes are returned for most AT commands and can be numeric (suitable for automated operation) or verbal (suited for keyboard operation), the value of n determines the mode, if 0 numeric mode is set, if 1 verbal mode is set, omission of the value n causes numeric mode to be set. For example issuing ATV1 sets verbal mode. Note that storing the active configuration using the

AT&W command does not store verbal/numeric mode, verbal mode is always restored at power up or reset.

Q(n) Enables/disables result codes according to the value n. A value of 0 enables codes, a value of 1 disables them, omission of n enables codes. Note that storing the active configuration using the AT&W command does not store this status, codes are always enabled at power up or reset.

I(0) Information. The zero suffix may be omitted. This command returns a text string giving information about the radio and its firmware version.

An example text exchange is given below:

TEXT SENT	TEXT RECEIVED	
ATS23=2 V Q	OK	The radio address is set to 2, verbal result codes are enabled.
ATD005004	NO ANSWER 005	A dial out to radio 4 via radio 5 was attempted but radio 5 did not respond.
ATD006004	CONNECT	A dial out to radio 4 via radio 6 was attempted and the connection was successful.
ATO		Transparent mode was entered, no result code is returned for this command.
Hello Fred	Hello Bill	Fred and Bill exchange data. This data can be text or binary information, the link is transparent to all except the escape code.
+++		The escape code was entered, no response is given to the code.
ATH	OK	The link was disconnected.
ABC	ERROR	The command was not understood as it is not valid.

6.8.2 SERIAL PORT HANDSHAKING WITH HAYES AT MODE

The DTR, DSR, DCD,CTS and RI lines are all used in Hayes mode, RTS can also be used as an option. DTR is used to tell the radio that the connected host is awake and is a command to the radio to exit power save mode (if enabled), DSR provides confirmation of this action to the host. DCD is used to indicate to the host that a link has been set up and that a transparent connection to the other end exists. CTS is used to provide flow control, RI indicates an incoming call, it may be used as an outstation wake up signal. RTS can optionally be used to hold the transmitter on while a message is loaded, this is required to prevent messages being broken up if delays occur in serial input, this can cause loss of parts of messages if relays are used.

6.8.3 POWER SAVING

The radio can be operated with or without power save enabled, typical applications might utilise power save for some outstation radios, whilst relay stations would operate without power save, this minimises

call set up times. The power save duty cycle can be modified to provide the best optimum between call set up time and power saving.

The power save period is set in the main edit menu of the set up programme under the heading "PSAVE ON TIME". To enable power save the "RADIO ADDRESS" must be greater than or equal to "MIN PWR SAVE ADDRESS" and less than or equal to "MAX PWR SAVE ADDRESS". This scheme is used so that a radio knows whether it has to issue "wake up" calls when dialling another radio.

As an example setting "PSAVE ON TIME" to 5 seconds causes the radio to power down for 5 seconds, the receiver is then switched on and a check is made for the presence of a radio carrier, if none is seen the radio powers down again. If a carrier is detected the radio waits for a period long enough to identify an incoming "wake up" signal, this period is calculated by the radio according to the programmed radio signal baud rate. If no wake up call is seen the radio powers down again, if so the radio stays awake allowing a link to be established, it returns to the cyclic power save mode when the link is cleared down.

Note that if "DTR SHUTDOWN" is enabled a radio remains completely shut down while DTR is inactive, it will not wake up according to the power save timer to see if any incoming messages are present. This mode should therefore only be used in conjunction with real time message scheduling.

6.8.4 PROGRAMMING PRECAUTION

When the master station or relay radios send an outward bound message, the address of the radio to which the message is being sent is checked against the min and max power save addresses, if a power saved radio is indicated a cyclic wake up message is sent for the period indicated by the programmed power save on time. If a power saved radio is not indicated a quick wake up message is sent immediately. These parameters along with some others are also used to calculate a timeout time in the event that no reply is received. *It is therefore essential that all radios in a system are programmed with the same parameters even if not power saved, otherwise communications will fail*.

6.8.5 CALL SET UP PROCEDURE

Any radio in the network may be asked by its host to set up a data link to another radio, this link may involve forwarding through intermediate radios. The radio must then set up that link and inform the host of success or failure, if successful the radio can then be asked to enter a transparent mode where data applied is simply passed across the network to and from the final destination. Transparent mode will then be terminated by the host and the radio will then terminate the link.

A radio will spend most of its time idling, if power save is enabled its processor will be shut down conserving power, the host can wake up the radio by asserting DTR, when awake the radio will respond by asserting DSR. The radio will now be in a control mode where it can respond to Hayes AT commands to set up a link, once the link is established the host is informed by the returned AT error code that it may ask the radio to enter transparent mode, when this is done DCD is raised and the host may communicate over the network. When it has finished it may terminate transparent mode either by using the AT escape code and then asking the radio to hang the link, or by dropping DTR, the radio will then inform other elements of the link that the transaction is complete, and drop DCD. If DTR is not active the radio will then return to sleep. If the link fails in transparent mode the radio must inform its host, since it is in transparent mode it can only do this by dropping DCD. The host should then terminate in the usual manner, and if necessary attempt the procedure again.

If "RTS/CTS HANDSHAKE" is enabled RTS is only needed during transparent mode, the transmitter will be keyed as long as RTS is asserted and message data can be loaded, CTS provides flow control. RTS/CTS operation in this mode is identical to that when no interface protocol is selected. It is not necessary to operate RTS in command mode when issuing AT commands.

If a radio receives a request to set up a link with itself as the destination it will raise RI to wake up its host, if auto answer is disabled ("AUTO ANSWER TIME"=0), it will wait for the "HOST INACTIVITY

TIME" for the host to accept the call by raising DTR and issuing an ATO command, DSR will be raised in immediate response to DTR. If auto answer is enabled the radio will wait for the number of seconds programmed as the “AUTO ANSWER TIME”, it will then enter transparent mode automatically but only if DTR has been raised. In either scenario DCD is raised as soon as transparent mode is entered and the calling radio is informed that the link is valid. The link will normally be terminated by the calling party, the radio will inform its host that this has happened by dropping DCD, the host should then use the AT escape code to terminate transparent mode or drop DTR. If DTR is not active DSR will be dropped and the radio will return to sleep.

Note that if DTR is dropped before a dial up command has been completed the link members will be left in an undefined state waiting to time out. Also if the dialling radio is power saved it will return to sleep before completing transmission of the AT error code to the host resulting in corrupt serial data. It is therefore recommended that DTR should not be dropped until commands have been completed and the appropriate error codes returned.

The operation of the hardware handshakes lines can be summarised as follows:

DTR when raised is a signal to the radio to wake up and enter command mode. Dropping DTR cancels all operations and returns the radio to idle.

DSR when raised provides acknowledgement that the radio is awake, or when dropped that the radio is entering idle.

DCD when raised is an indication that a link has been established and that transparent mode is active, it is dropped when the link fails or is terminated.

RI when raised is an indication that an incoming call is being received.

CTS indicates that there is space in the serial input buffer.

RTS is optionally used to key the transmitter in transparent mode.

6.8.6 RADIO ROUTING

Routing is determined by the dial up command used by the calling host. Radios will pass on route information to all members of a link at the point of call set up. When a radio calls another radio either because its host has requested a dial up or because it has been told by another radio that it is to be part of a link, it first sends a wake up request to the next radio in the route and waits for a reply, when this is received the route information is sent, no reply is required to this message, the next message expected is a link fail or link established message originating from the final destination radio. When received the link established message is forwarded on to the original calling radio. If a radio fails to respond to the wake up signal the radio calling it will return the address of the failed radio in the link fail message, a final destination radio may also reply with a message indicating that the destination host did not respond to the wake up procedure. This data is returned to the host by appending the "NO ANSWER" error message with the failed address in ASCII numerals or the message "NO PICK UP". If no link failed/established message is received "NO ANSWER" is returned on its own.

6.8.7 IMPLEMENTED S REGISTERS

The S register values can also be programmed using the A4P setup programme, the implemented registers are listed by function in the “EDIT MODEM/INTERFACE” menu.

S0 AUTO ANSWER

Sets the number of seconds to wait after raising RI before entering transparent mode or if zero waits for the host to respond with an ATO command (up to the time set by S21).

S1 not implemented

S2 ESCAPE CHARACTER

Sets the value used for the 3 character escape code.

S3 to S11 not implemented

S12 GUARD TIME

Sets the time in 20ms units required to separate the escape code sequence from other data.

S13 NETWORD ID LSB
S14 NETWORK ID MSB

Both bytes are transmitted and checked as part of every radio message.

S15 MIN POWER SAVE ADDRESS
S16 MAX POWER SAVED ADDRESS

All radios within the range max to min inclusive will operate in power saved mode. Any comms with destination addresses in this range will start with a long wake up message.

S17 RADIO SIGNAL BAUD AND FORMAT (read only register)

Bit 0-2 baud rate (0=150, 2=600, … 6=9600)
Bit 3 1=Asynchronous mode, 0=Synchronous mode
Bit 4 1=Parity Enabled
Bit 5 1=Odd parity, 0=Even Parity
Bit 6 1=7 bit data, 0=8 bit data
Bit 7 1=2 stop bits, 0=1 stop bit

This register is read by some of the diagnostic programmes available in order to determine message times and hence timeouts.

S18 HOST INACTIVITY TIME

The time for which a radio will wait for its host to wake up after raising RI if auto answer is disabled.

S19 to S22 not implemented

S23 RADIO ADDRESS

S24 to S31 not implemented

6.9 MODBUS

6.9.1 SETTING UP MODBUS OPERATION

The ART series can be programmed to transport "MODBUS ASCII" or "MODBUS RTU" format messages in single master systems. These options are selected as the "INTERFACE PROTOCOL" in the "EDIT MODE/INTERFACE" menu. It is not necessary for all radios to run the same modbus interface, "MODBUS ASCII" and "MODBUS RTU" modes can be mixed within a system. Remote programming is always enabled when either modbus interface is enabled.

When modbus modes are enabled the "NETWORK ID" and "RADIO ADDRESS" fields must be filled out such that every radio in a system has the same network id, but a different radio address. Notes should be kept detailing the installation of radios and their addresses.

When transporting modbus messages the master station radio must be programmed with a routing table, this is also accessed in the "EDIT MODEM/INTERFACE" menu by setting "ROUTING TABLE" to "ON" and selecting "EDIT ROUTING TABLE". This selection leads to several pages of modbus addresses, the route by which every modbus address is reached must then be entered, for example if the modbus device with address 37 is physically connected to the radio with radio address 23, and radio 23 is accessed from the base station via relay radios 4 and 19, then the field entitled "MBUS 37" should be loaded with the route "4,19,23". If the modbus devices with modbus addresses 65 and 93 are physically connected to radio 45 and no relays are required then the fields entitled "MBUS 65" and "MBUS 93" should both be loaded with "45".

If no routing table is loaded or a modbus address cannot be found in the routing table the radio assumes that the destination radio address is the same as the modbus address and that no relays are required. This can be taken advantage of in simple schemes where no more than one modbus device is connected to any one radio.

6.9.2 MODBUS OPERATION

Operation in modbus modes relies on the master/slave poll/reply nature of modbus. The set up of the radios does not differentiate between a master and slave, the only difference in practice would be that the master station radio will be loaded with a routing table. There is no restriction on the number of masters in a system, but they should all be loaded with routing tables.

When a poll is initiated at a master station radio the destination modbus address in the modbus message is looked up in the routing table to determine the addresses of the radio(s) required to complete the link, the message is then sent and all the radios expect to send a reply back the same way. Once this reply has been sent the radios are all ready to start another poll/reply sequence.

If a radio is specified as a relay in a link any connected modbus devices will not be aware of comms that take place as no activity occurs on the serial port in this state. This may cause problems however if more than one master exists in a system as a radio that is being used as a link in a relay is not available to transmit messages.

6.9.3 POWER SAVE OPERATION WITH MODBUS

When modbus modes are enabled in the A4P programme two further fields appear entitled "MIN PWR SAVE ADDRESS" and "MAX PWR SAVE ADDRESS", if power save operation is not required set both these fields to zero.

If power save operation is required it is enabled by setting the "RADIO ADDRESS" to a value greater or equal to "MIN PWR SAVE ADDRESS" and less than or equal to "MAX PWR SAVE ADDRESS". The radio will then enter low power standby mode for the time programmed in the "PSAVE ON TIME" field in the main edit menu, it will then wake up and check for an incoming signal, if none is present it

will return to sleep and repeat the cycle. If a signal is detected the radio will stay awake until a reply to the outward bound message has been returned.

When the master station or relay radios send an outward bound message, the address of the radio to which the message is being sent is checked against the min and max power save addresses, if a power saved radio is indicated a cyclic wake up message is sent for the period indicated by the programmed power save on time before the actual data message is sent, if a power saved radio is not indicated the data message is sent immediately. These parameters along with some others are also used to calculate a timeout time in the event that no reply is received. It is therefore essential that all radios in a system are programmed with the same parameters even if not power saved, otherwise communications will fail.

Note that if "DTR SHUTDOWN" is enabled a radio remains completely shut down while DTR is inactive, it will not wake up according to the power save timer to see if any incoming messages are present. This mode should therefore only be used in conjunction with real time message scheduling.

6.9.4 SERIAL PORT HANDSHAKING WITH MODBUS

When modbus modes are enabled the RS232 port lines DTR, DSR and RI, can be used to assist in power saving the host modbus device. The RTS and CTS lines are not used and the "RTS/CTS HANDSHAKE" option in the "EDIT MODEM/INTERFACE" menu of the A4P programme should be set to "OFF". The RI (ring indicator) line is asserted when a radio detects an incoming message, it can be used to wake up a modbus slave device, when the modbus slave is ready to accept data it should assert DTR, DSR will be asserted in response and the received message will be output to the modbus device. The "HOST INACTIVITY TIME" field in the set up programme defines a time limit for the modbus device to assert DTR in response to RI, if this time limit is exceeded RI is dropped and the radio sends back a reply indicating the destination device failed to respond and the link is cancelled. This time is also used to define the time limit for the modbus device to reply to the incoming message, if the time limit is not exceeded the reply is sent back to the master station and RI is dropped. The modbus slave may then release DTR and return to power save mode. Note that as long as DTR is asserted the radio will not return to its power save mode (if enabled in the setup programme). DSR will remain asserted in this case.

The master station can also control the power saving of its radio using DTR, the radio will operate in power save mode as long as DTR is not active, asserting DTR wakes the radio, DSR is asserted in return to indicate that the radio is awake and ready to accept data.

If use of the handshake lines is not required DTR should be connected either to a voltage of +3.5 to +15V such that sleep mode is never allowed or at slave sites it can be connected to RI so that the radio stays awake as long as RI is asserted.

6.9.5 TIMEOUTS IN MODBUS MODES

When a transmission from a master station radio is made in modbus mode the radio will calculate a timeout for a reply, this calculation is based on many configuration parameters including the radio baud rate, lead in delay, host inactivity time, maximum message length, power save timing etc. If power saving is enabled and the baud rate is low this time can be large (the calculation limits the result to a maximum of 4.25 minutes. To reduce the possibility of "hung" radios the destination radio will send a link closing message if the destination modbus slave does not reply. This link closing message is only used by the radios to close the link, it is not passed to the modbus master.

If the modbus master itself times out before the radio link does, it can send another poll, radios along the link will cancel the previous route and set up the new one. The exception to this is the previous destination radio if it is still trying to wake up its modbus slave, it will ignore the new message and try to download its original message when the slave awakes, a conflict will then arise if a reply is sent. To

avoid this situation the modbus master timeout time should allow the maximum "HOST INACTIVITY TIME" to expire plus the time required to get a message and its reply through the link.

6.10 CUSTOM PROTOCOLS

In addition to the protocols already written for the ART or under development, custom protocols can be written and downloaded via a PC or over the air as systems require change, thereby minimising disruption.
Should a special protocol or interface be required please contact the sales office.

6.11 RFT ROUTING PROTOCOL

6.11.1 SETTING UP RFT ROUTING OPERATION

The ART series can be programmed to route non-specific protocol messages in single master systems using "RFT ROUTING" mode. This mode supports relay messaging. This option is selected as the "INTERFACE PROTOCOL" in the "EDIT MODEM/INTERFACE" menu. Remote programming is always enabled when this mode is enabled.

In describing operation the address contained in the host system message will be referred to as the "protocol address" and address programmed in the radio under the "RADIO ADDRESS" field in the setup program will be referred to as the "radio address".

RFT Routing mode is controlled at the master station by picking out an 8 bit protocol address field in the message to be sent, this address is then looked up in the routing table stored in the master station radio. The routing table can contain the radio address (as programmed in the RADIO ADDRESS field in the setup program) of a single radio connected to the required destination device or a list of relay radio addresses plus the destination radio address. The message is then transmitted from the base station radio as a packet with the routing information prefixed to it. The message is then relayed through any relay radios specified until it reaches the destination radio where it is output from the serial port in its original form with the packet information removed. During this process each radio considers itself to be part of an established link. A reply is then expected, however the outstation radios are not programmed with routing tables, a reply issued is assumed to be destined to the master station. The address in the protocol message is therefore not checked and the reply is simply sent back down the established link to the master station radio where it is output from the serial port. As the reply is passed back the link members no longer consider themselves to be part of an established link and return to idle.

Note that there is no differentiation in operating mode between a relay radio and an outstation radio, if an outstation radio is specified as a relay in a link any device connected to the serial port will be unaware of relay communications taking place.

The packet used to transfer protocol messages specifies the route to be taken and also the current stage in the route, it is therefore of no concern if radios further down a relay link "hear" the message before they are expected to repeat it, they will ignore the message until specifically requested to repeat it.

The position of the address in the protocol field is specified using the "ADDRESS OFFSET" parameter in the setup programme. A setting of 0 specifies zero offset, i.e. the address is the first byte in the message, an offset of 6 specifies the 7th message byte and so on. 16 bit addressing or more is not supported as a maximum of only 256 destinations can be supported by the routing table. If the protocol message format does use 16 bit addressing specify the offset for the least significant byte and try to ensure that no two devices use the same l.s.b. in their address.

In order to determine the position of the address in a protocol message the radio has to know where the message starts and ends, this can be done in one of two ways: If the RTS/CTS HANDSHAKE option is

turned on RTS should be activated before commencing a message, CTS will be activated in response and the message may be loaded, the first character received after CTS becomes active is considered to be the start of the message. Transmission will start as soon as enough characters have been loaded for the protocol address to be extracted and the route determined from the routing table. Transmission continues until RTS is de-activated, CTS will drop when transmission is complete. CTS may also drop if the serial input buffer becomes more than ¾ full to implement flow control, if this happens RTS should be kept active until CTS is re-activated, more characters may then be loaded or RTS may be dropped.

If the RTS/CTS HANDSHAKE option is turned off, the radio relies on gaps in the serial data to determine the start and end of messages. A gap equivalent to two character periods at the serial port baud rate is treated as a message end. The first character received after such a gap is treated as the first character of the next message.

When RFT ROUTING mode is enabled the "NETWORK ID" and "RADIO ADDRESS" fields must be filled out such that every radio in a system has the same network id, but a different radio address. Notes should be kept detailing the installation of radios and their addresses.

The master station radio must be programmed with a routing table, this is accessed in the "EDIT MODEM/INTERFACE" menu by setting "ROUTING TABLE" to "ON" and selecting "EDIT ROUTING TABLE". This selection leads to several pages of protocol addresses, the route by which every protocol address is reached must then be entered, for example if the device with protocol address 37 is physically connected to the radio with radio address 23, and radio 23 is accessed from the base station via relay radios 4 and 19, then the field entitled "ADDR 37" should be loaded with the route "4,19,23". If the devices with protocol addresses 65 and 93 are physically connected to radio 45 and no relays are required then the fields entitled "ADDR 65" and "ADDR 93" should both be loaded with "45".

If no routing table is loaded or a protocol address cannot be found in the routing table the radio assumes that the destination radio address is the same as the protocol address and that no relays are required. This can be taken advantage of in simple schemes where no more than one device is connected to any one radio.

6.11.2 POWER SAVE OPERATION WITH RFT ROUTING

When RFT ROUTING mode is enabled in the A4P programme two further fields appear entitled "MIN PWR SAVE ADDRESS" and "MAX PWR SAVE ADDRESS", if power save operation is not required set both these fields to zero.

If power save operation is required it is enabled by setting the "RADIO ADDRESS" to a value greater or equal to "MIN PWR SAVE ADDRESS" and less than or equal to "MAX PWR SAVE ADDRESS". The radio will then enter low power standby mode for the time programmed in the "PSAVE ON TIME" field in the main edit menu, it will then wake up and check for an incoming signal, if none is present it will return to sleep and repeat the cycle. If a signal is detected the radio will stay awake until a reply to the outward bound message has been returned.

When the master station or relay radios send an outward bound message, the address of the radio to which the message is being sent is checked against the min and max power save addresses, if a power saved radio is indicated a cyclic wake up message is sent for the period indicated by the programmed power save on time before the actual data message is sent, if a power saved radio is not indicated the data message is sent immediately. These parameters along with some others are also used to calculate a timeout time in the event that no reply is received. It is therefore essential that all radios in a system are programmed with the same parameters even if not power saved, otherwise communications will fail.

Note that if "DTR SHUTDOWN" is enabled a radio remains completely shut down while DTR is inactive, it will not wake up according to the power save timer to see if any incoming messages are present. This mode should therefore only be used in conjunction with real time message scheduling.

6.11.3 SERIAL PORT HANDSHAKING WITH RFT ROUTING

When RFT ROUTING mode is enabled the RS232 port lines DTR, DSR and RI, can be used to assist in power saving the host device. The RTS and CTS lines are optionally used according to the "RTS/CTS HANDSHAKE" option in the "EDIT MODEM/INTERFACE" menu for flow control. The RI (ring indicator) line is asserted when a radio detects an incoming message, it can be used to wake up an outstation slave device, when the slave is ready to accept data it should assert DTR, DSR will be asserted in response and the received message will be output to the device. The "HOST INACTIVITY TIME" field in the set up programme defines a time limit for the device to assert DTR in response to RI, if this time limit is exceeded RI is dropped and the radio sends back a reply indicating the destination device failed to respond and the link is cancelled (this message is not output to the device connected to the master station serial port). This time is also used to define the time limit for the device to reply to the incoming message, if the time limit is not exceeded the reply is sent back to the master station and RI is dropped. The slave may then release DTR and return to power save mode. Note that as long as DTR is asserted the radio will not return to its power save mode (if enabled in the setup programme). DSR will remain asserted in this case.

The master station can also control the power saving of its radio using DTR, the radio will operate in power save mode as long as DTR is not active, asserting DTR wakes the radio, DSR is asserted in return to indicate that the radio is awake and ready to accept data.

If use of the handshake lines is not required DTR should be connected either to a voltage of +3.5 to +15V such that sleep mode is never allowed or at slave sites it can be connected to RI so that the radio stays awake as long as RI is asserted.

6.11.4 TIMEOUTS IN RFT ROUTING MODE

When a transmission from a master station radio is made in RFT ROUTING mode the radio will calculate a timeout for a reply, this calculation is based on many configuration parameters including the radio baud rate, lead in delay, host inactivity time, maximum message length, power save timing etc. If power saving is enabled and the baud rate is low this time can be large (the calculation limits the result to a maximum of 4.25 minutes. To reduce the possibility of "hung" radios the destination radio will send a link closing message if the destination slave does not reply. This link closing message is only used by the radios to close the link, it is not passed to the device connected to the master station radio.

If the device connected to the master station radio itself times out before the radio link does, it can send another poll, radios along the link will cancel the previous route and set up the new one. The exception to this is the previous destination radio if it is still trying to wake up its slave, it will ignore the new message and try to download its original message when the slave awakes, a conflict will then arise if a reply is sent. To avoid this situation the master timeout time should allow the maximum "HOST INACTIVITY TIME" to expire plus the time required to get a message and its reply through the link.

7

INTERFACING WITH OTHER PRODUCTS

7.0 INTERFACING WITH OTHER PRODUCTS

7.1 INTEGRATING THE ART INTO A SYSTEM USING A CONTROL MICRO SYSTEMS TYPE 5902 BELL 202 MODEM.

Many systems in the field use audio radios with various modems connected to the Audio ports. a popular one seems to be the 5902, from control Microsystems of Canada, hence we are covering the set up of the ART400 to work with the 5902.

The type 5902 modem is a 1200 baud Bell 202 modem which when connected to a suitable radio transceiver can successfully communicate with the ART400 radio modem..

Trials have been carried out using an ART400 configured for external audio mode as the transceiver for the 5902 modem, to mimic an audio transceiver. The ART400 was set for line input and output levels of 0dBm, the line input and output signals were connected to the "RX" and "TX/RX" terminal pairs on the modem respectively, The "KEY-" output was connected to the "GND" pin on the ART400 and the "KEY+" output to the "DI0" pin. "DI0" is the transmit enable input on the ART400 when configured for "EXT AUDIO-PTT" mode. It was found necessary to configure the ART400 with "CARRIER MUTE" on, presentation of noise to the 5902 modem when no carrier is present caused failure to decode signals.

The other end of the radio link was realised using a second ART400 configured to use its internal modem. The radio signal format was set to 1200 baud, 8 data bits, no parity, and 1 stop bit., BELL 202 Asynchronous. The lead in delay was set to 40ms and the lead out delay to 0. The serial port was also programmed for 1200,n,8,1 format. "INTERFACE PROTOCOL" was set to "NONE" and "MESSAGE PACKETING" to "OFF".

The 5902 modem was set with the following DIP switch settings:

CS0 closed, CS1 open	50ms RTS/CTS delay
CD0, CD1 both open	19ms carrier detect delay
CL0, CL1 both open	6ms carrier loss delay
AS0, AS1 both open	anti-streaming off
SC0, SC1 both open	soft carrier turn-off disabled
CSH open	1ms CTS hold time
RCD open	Carrier detect audio only
FDX open	half duplex
TST open	test mode off
4W closed	4 wire mode enabled
2W open	2 wire mode disabled

The above system was tested with a "ping-pong" test program that transmits short messages in alternate directions, error free communications were achieved. The system was tested with the "AUDIO RESPONSE" settings in the ART400 radios set to both "FLAT" and "PRE-EMP/DE-EMP" (All radios within the system must used the same setting).

8

PROGRAMMING

8.0 PROGRAMMING

8.1 INTRODUCTION

The ART Series can be programmed with any PC operating DOS via a standard 9W – 9W RS232 cable. The programming software is available on either a 3.5inch floppy or CD ROM and will allow the user to configure the product to work within many systems.

At the time of writing this manual a Win98 version is under development.

8.2 A4P PROGRAMMING SOFTWARE VERSIONS

There are various versions of A4P these are:

A4P_	Standard client copy
A4P_R	Standard client copy with Remote Network Management software
A4P_F	Factory Version
A4P_FR	Factory Version with Remote Network Management software
A4P_DFR	Full demo version (Will operate without a radio connected)

8.3 CONFIGURATION OF THE A4P PROGRAM

To set up the programme for your computer put the supplied disc into the drive and type "A4P_/C" (If there is an extension after the under score as in **8.2** add it in), the /C extension causes the configuration mode to be entered. The programme provides the user with instructions about what to do and allows set up for the type of screen in use and selection of either comms port 1 or 2 for programming.

8.4 STARTING THE PROGRAM.

To start the programme, put the supplied disc in the drive and type "A4P_"

(Note: hard disc users may wish to run the programme from hard disc, to do this copy the files named A4 P_.EXE, RP.CFG and DEFAULTS.DAT to the appropriate directory and proceed as for a floppy drive, if RP.CFG is not present is may be created by entering the configuration mode by typing "A4P_/C". On starting, the programme will load and display the opening menu.

8.5 LOCAL PC PROGRAMMING

Connect the ART product to the designated PC's coms port via a normal 9Way to 9Way RS232 cable and select **"00"** on the two front panel switches, selecting **CHANNEL "00"** puts the ART in local program mode. After programming ensure the switches are changed to reflect the required RF channel.

8.6 OPENING MENU

```
R.F. DATATECH ART/MRT SERIES RADIO MODEM FORMAT PROGRAMME  V 2.0
                    COMPATIBILITY NUMBER  3
                    PROGRAM RADIO

                    READ RADIO

                    LOAD PROGRAM FROM DISC

                    SAVE PROGRAM TO DISC

                    EDIT PROGRAM

                    EDIT NOTES

                    PRINT PROGRAM

                    ERASE PROGRAM

                    CALIBRATE

                    NETWORK MANAGEMENT

                    QUIT
USE CURSOR KEYS TO MOVE AROUND SCREEN
SELECT OPTIONS WITH ENTER KEY
```

"Arrow Keys" are used to move round the menu and the RETURN key is used to make the selection required. Whenever a programme is produced for a Radio Modem, it may be given a name and stored and retrieved from disc by using the SAVE TO DISC and LOAD FROM DISC options.

8.6.1 PROGRAMME VERSION NUMBER & COMPATIBILITY MESSAGE

If new fields are added or changes are made to the PC program, the version number changes but in most cases a new program will program older radios. To complicate matters more, over time there will be changes and upgrades to the firmware in the radio which may not be compatible with older PC programming software. To overcome this, each modem has a compatibility serial number which is changed at the factory if and when the firmware changes. If the product and PC software is not compatible, as a safety precaution the PC will not read or write to the modem but will display a compatibility error message. If this happens a different edition of PC programming software with the same compatibility number may be required.

8.6.2 PROGRAME RADIO/READ RADIO

To read or programme the radio both Switches on the front of the modem should be set to zero (0). The radio data can be read via the “Read Radio” function or programmed via the “Program Radio” function.

Note: Always read the radio first as the PC will read and display the RF power & Alignment range as well as the other factory programmed parameters.

When programming/reading has finished the screen reverts to normal.

Normal operation of the radio is resumed when the channel switches are set to a valid channel number.

8.6.3 LOAD PROGRAM FROM DISC

When “Load Program from Disc” is selected it is possible to display the directory containing the relevant programs by following the prompt at the bottom of the screen. CTRL “D” is used to select the required directory and pressing “ESCAPE” returns the Opening Menu screen.

8.6.4 SAVE PROGRAM TO DISC

Enables the operator to save the program to disc for future use.

8.6.5 EDIT NOTES

The PC program has a text editor accessed from the main menu that will allow the user to enter the unit's hard link configuration and add notes if required. The file has defaults but these can be over typed and changed as required. The print command will print the notes together with all the programmed parameters.

8.6.6 PRINT PROGRAM

Prints the selected parameters for a hard copy record

8.6.7 ERASE PROGRAM

Simply erases the parameters selected by the user and returns to the default program

8.6.8 CALIBRATE

The calibrate options screen is primarily used for factory programming, although one or two fields are available to the user and are explained further on in this section.

8.6.9 NETWORK MANAGEMENT (OPTION)

This software is optional and enables the user to remotely program the radio and configure the network over the radio links, it also contains some very powerful diagnostic and re-alignment features.

8.6.10 QUIT

This returns the user to the DOS prompt.

8.7 DESCRIPTION OF MAIN MENU EDIT FUNCTIONS:

8.7.1 MAIN MENU

```
EDITING FILE 'NONAME'

INTERFACE AND MODE    INTERNAL MODEM    RETURN TO MAIN MENU

RADIO MODE            SIMPLEX           EDIT CHANNEL DATA
FREQUENCY RANGE       UK MPT1329
CHANNEL SELECT MODE   INCREMENTAL       EDIT MODEM/INTERFACE
NUMBER OF CHANNELS    37
CHAN SWITCH OVERRIDE  DISABLED
CHANNEL INCREMENT     12.5kHz
RX START FREQUENCY    458.50000
TX START FREQUENCY    458.50000

POWER RANGE           50mW-5W           LOCKOUT TIMER MODE    RESETTABLE
TRANSMIT POWER        0.100             LOCKOUT TIME (s)      0
PSAVE ON TIME (s)     0.00              AUDIO RESPONSE        FLAT
PSAVE OFF TIME (ms)   50                CARRIER MUTE          OFF
PSAVE RESUME TIME (s) 0

SERIAL NUMBER
NOTEPAD
ALIGNMENT RANGE       F3 450-462MHz 12.5kHz

 USE CURSOR KEYS TO MOVE AROUND SCREEN
 SELECT OPTIONS WITH ENTER KEY
```

To edit the radio modem programme data select “EDIT PROGRAMME” and the menu above will be displayed: The up/down arrow keys are used to move the cursor round the fields on the screen. To change a field press the RETURN key and then select the data with the left/right arrow keys. Some fields will require you to type in data e.g. channel Numbers or channel frequencies. After confirming the selected data is correct press the RETURN key to enter. If you want to change the data once it's been entered, just move the cursor to the desired field and press RETURN. You can then repeat the operation.

8.7.2 INTERFACE & MODE

The Interface & Mode selects the interface and path of the signals within the ART and can be set for the following:

INTERNAL MODEM, which uses the RS232/5VTTL serial port as an interface to the internal 150-9600bps modem.

EX AUDIO-PTT, which selects the 2/4Wire Audio interface and external PTT (TX Enable) and routes the audio via internal level amplifiers to & from the transmitter & receiver modules respectively. The interface level is normally factory set for –13dBm, but can be adjusted between –30 to +6dB from the CALIBRATE MENU.

EX AUDIO-TOX, this is the same as the EX AUDIO-PTT but routes the audio input via a Tone Operated Switch (TOX) which can be set to detect V23 or BELL202 formats.
Detection of the selected format will key up the transmitter and forward the incoming data.

8.7.3 RADIO MODE

This function selects Simplex or Semi-duplex/Duplex operation but is pre-determined in some pre-set bands like MPT1329 or MPT1411.

8.7.4 FREQUENCY RANGE

This selects the frequency range and covers the discrete VHF, UHF and 900MHz bands, or specific telemetry band allocations used in various countries.

To check the programmable range of the product connected, look at the Alignment range field.

VHF	138 – 155MHz 150 – 175MHz 175 – 225MHz
UHF	380 - 512MHz
900MHz	820 – 950MHz
UK Pre-set	MPT1411/VNS2111 Outstation MPT1411/VNS2111 Scanner MPT1329

8.7.5 ALIGNMENT RANGE

This reads the factory aligned programmable range and the channel spacing from the connected radio.

e.g. F3 458 – 460MHz 12.5 KHz

or

TX F3 458 – 470MHz, RX F2 430 – 442MHz 12.5 KHz

8.7.6 CHANNEL SELECTION MODE

There are two ways of setting up channels on the radio, in INCREMENTAL mode a start frequency for both RX and TX is set up along with a channel increment and the desired number of channels, for example entering 450MHz as the RX and TX start frequency, 5 as the number of channels, and 12.5KHz as the channel increment, will result in frequencies of 450.0000, 450.0125, 450.0250, 450.0375, and 450.0500 being allocated to channels 1 to 5 of the modem, the TX and RX frequencies can be offset by using different start frequencies. Up to 80 channels can be programmed in this way. (Note that selection of MPT1329 or MPT1411 for frequency range forces use of incremental mode and inhibits alteration of the number of channels or their spacing). In DISCRETE mode channel frequencies may be explicitly entered in the channel data and do not have to conform to any regular spacing.

8.7.6.1 Number of Channels

This option sets the number of channels required in INCREMENTAL channel selection mode, it is suppressed when the mode is set to DISCRETE. See the section on CHANNEL SELECTION MODE for more detail.

8.7.6.2 Channel Increments

This option sets the channel spacing required in INCREMENTAL channel selection mode, it is suppressed when the mode is set to DISCRETE. See the section on CHANNEL selection for more detail.

8.7.6.3 RX Start Frequency

This option sets the channel one RX frequency required in INCREMENTAL channel selection mode, all subsequent channels are spaced above this frequency separated by the CHANNEL INCREMENT, it is suppressed when the mode is set to DISCRETE. See the section on CHANNEL SELECTION MODE for more detail.

8.7.6.4 TX Start Frequency

This option sets the channel one TX frequency required in INCREMENTAL channel selection mode, all subsequent channels are spaced above this frequency separated by the CHANNEL INCREMENT, it is

suppressed when the mode is set to DISCRETE. See the section on CHANNEL SELECTION MODE for more detail.

8.7.7 POWER RANGE

This option is used to select either the 10mW - 1Watt or 50mW - 5Watt transmitter version.
Note: In the one watt range with an ATR400TR-1 connected, the maximum programmable power level is 750mW

8.7.8 TX POWER

The required transmitter power in watts can be entered in this field. For example 1.32Watts or 0.05 Watts.
NOTE: Programming an ART to a RF power level exceeding local regulations is strictly forbidden and may lead to prosecution. R.F. Technologies is not responsible for any illegal use of its products and is in no way is responsible for any claims or penalties arising from its operation in ways that contravene local regulations.

8.7.9 POWER SAVE OPTIONS

The save on, save off and resume time are all programmable parameters to provide further power saving features.

8.7.9.1 Save On Time

This is for power save programming and sets the time the transceiver is switched off for during the power save cycle (Power Save On). The Save On Time is programmable from
0 – 63.75 Seconds in 250ms (1/4 second) steps. A setting of 0 disables power save.

8.7.9.2 Save Off Time

This is for power save programming and sets the time the transceiver is switched on for during the power save cycle (Power Save Off). The Save Off Time is programmable from
0 - 2550 in 10ms steps. The default setting is 50ms.

8.7.9.3 Save Resume Time

When a carrier is received during power save mode, the unit will come out of its power save mode to receive the signal. The Resume Time, is the time the receiver stays active after the received carrier has dropped out, i.e. the time power save mode is deferred. This is programmable between 0 - 255 seconds in 1 second steps.

8.7.10 SERIAL NUMBER

The serial number may not be altered using the set up program, it does however provide the user with the means to read it.

8.7.11 NOTE PAD

The notepad provides a facility for storing up to 48 ASCII characters in the modem's memory such as its location or ownership etc.

8.7.12 LOCKOUT TIME MODE

Selectable either re-settable or cumulative, for a full description see section 6.17

8.7.13 LOCKOUT TIME

Selects the transmit timeout timer period, 0 - 255 seconds in one second steps.

8.7.14 AUDIO RESPONSE

This option sets the response of the receiver's and transmitter's audio path to either flat or de-/pre-emphasised. When de-/pre-emphasised is selected a 300Hz low pass filter is also switched in.
***Note:** IF INTERNAL MODEM OPERATION IS REQUIRED THE RX AUDIO RESPONSE SHOULD BE SET TO A FLAT RESPONSE.*

8.7.15 CARRIER MUTE

The receive audio path can be set to mute when no incoming carrier is detected if this option is turned on.

8.7.16 MENU OPTIONS

8.7.16.1 Return to Main Menu

As suggested this function returns to the Main Menu.

8.7.16.2 Edit Channel Data

This field takes you into the Channel data Screen

8.7.16.3 Edit Modem/Interface

This field takes you into the modem and interface menu

8.8 EDIT CHANNEL DATA SCREEN

```
EDITING FILE 'NONAME'

RX FREQUENCY (MHz)        459.00000          EDITING CHANNEL      1
TX FREQUENCY (MHz)        457.00000
                                             RETURN TO EDIT MENU

                                             NEXT CHANNEL

                                             PREVIOUS CHANNEL

 USE CURSOR KEYS TO MOVE AROUND SCREEN
 SELECT OPTIONS WITH ENTER KEY
```

8.8.1 DESCRIPTION OF CHANNEL DATA MENU FUNCTIONS:

The channel data screen is displayed when "EDIT CHANNEL DATA" is selected from the main edit menu. Up to 32 channels may be edited in discrete channel selection mode, and up to 80 in incremental mode. The channel number displayed at the top right of the screen corresponds to the channels that may be selected by the BCD channel switches in the modem. The channels can be stepped through one by one using the NEXT and PREVIOUS CHANNEL options.

8.8.2 RX & TX FREQUENCY

In incremental channel selection mode the frequencies are displayed for information purposes only and may not be edited, in discrete mode each frequency must be explicitly entered. For convenience the TX frequency can be made the same as the RX frequency by hitting the space bar when prompted for an entry.

8.8.3 NEXT/PREVIOUS CHANNEL

By pressing the Enter key the next or previous channel is displayed.

8.8.4 EDITING CHANNEL

Press the Enter key and then use the Arrow keys to select the required channel number, then press the Enter key again to display the channel information.

8.9 AUDIO INTERFACES

There is one selectable audio interface with two selectable modes of operation EXT AUDIO-PTT & EXT AUDIO-TOX . These are selected from the INTERFACE & MODE field.

8.9.1 EXT AUDIO-PTT

Selecting EXT AUDIO-PTT enables the balanced 600 ohm audio interface with TX enable for external modem operation.

8.9.2. EXT AUDIO-TOX SETUP MENU

Selecting the EXT AUDIO-TOX (Audio Tone Operated Switch) enables a either Bell202 or V23 tones detected at the audio port to key up the transmitter. On the MAIN MENU, selecting EDIT MODEM/INTERFACE will bring up the TOX MENU as outlined below

```
EDITING FILE 'NONAME'

........                                RETURN TO EDIT MENU
........
........                                ........
........                                ........
                                        ........
FFSK TONE SET         BELL 202          ........
........                                ........

........                                ........
........                                ........
........                                ........
........                                ........
                                        ........
........                                ........
........
DTR SHUTDOWN          OFF
........                                ........
LEAD OUT DELAY (ms)   10                ........


 USE CURSOR KEYS TO MOVE AROUND SCREEN
 SELECT OPTIONS WITH ENTER KEY
```

8.9.3 FFSK TONE SET

This ART can be programmed to detect either incoming V23 or BELL202 tone sets.
On a successful decode the ART with key up its transmitter send the incoming data.

8.9.4 DTR SHUTDOWN

If On is selected, the DTR line is used for external power save, with the on/off ratio
of the radio controlled externally via the DTR line. In this mode more of the modem's circuits are shutdown (including the microprocessor), this saves more power but care must be taken to ensure that the modem is enabled when a transmission is to take place. Note that there is a hardware link option to allow the serial port to shut off when DTR is not active, this allows the radio current to be reduced to its bare minimum. In applications where DTR is not connected this link option must of course be disabled.

8.9.5 LEADOUT DELAY

The lead out delay is the time the transmitter stays up after the audio data finishes, this is to avoid mute noises that could corrupt data that is not framed, packeted and does not have an end of message character. This is programmable between 0 & 256milli seconds

8.10 DIGITAL INTERFACE & INTERNAL MODEM

Selecting the INTERNAL MODEM field from the INTERFACE & MODE Fields enables the serial port and internal modem. The parameters can then be set-up from the INTERNAL MODEM/INTERFACE MENU

8.10.1 INTERNAL MODEM/INTERFACE EDIT MENU

```
EDITING FILE 'NONAME'

RADIO BAUD RATE       9600              RETURN TO EDIT MENU
RADIO DATA BITS       8
RADIO PARITY          NONE              INTERFACE PROTOCOL    NONE
RADIO STOP BITS       1                 MESSAGE PACKETING     OFF
                                        FWD ERROR CORRECTION  OFF
........                                ........
FFSK SYNC/ASYNC       SYNCHRONOUS       ........

SERIAL BAUD RATE      9600              ........
SERIAL DATA BITS      8                 ........
SERIAL PARITY         NONE              ........
SERIAL STOP BITS      1                 ........
                                        ........
RTS/CTS HANDSHAKE     OFF               ........
DCD OPERATION         CARRIER+DATA
DTR SHUTDOWN          OFF
LEAD IN DELAY (ms)    30                ........
LEAD OUT DELAY (ms)   0                 ........


 USE CURSOR KEYS TO MOVE AROUND SCREEN
 SELECT OPTIONS WITH ENTER KEY
```

8.10.2 RADIO BAUD RATE

Sets the baud rate of the internal radio modem, (currently 150 – 9600 baud within the prescribed 12.5 KHz channel) this setting does not govern the speed at which the serial port operates which should be set either at the same speed or a higher speed. The radio baud rate should be set at the minimum possible to maintain the required throughput, lower speeds will give better results in poor signal conditions.

Speeds of 150, 300, 600, 1200 & 2400 use FSSK Bell202 & V23 Mode II tone sets

Speeds of 4800bps & 9600bps use GMSK & 4 level FSK respectively with a default of synchronous transmission.

8.10.3 RADIO DATA BITS

Selects either 7 or 8 data bits

8.10.4 RADIO PARITY

Selects none, even or odd Parity

8.10.5 RADIO STOP BITS

Enables the selection of either 1 or 2 stop bits.

8.10.6 FFSK TONE SET

At speeds between 150 & 1200bps either Bell 202 or V23 mode 2 tone sets can be selected.
Bell 202 tones should be selected if possible since their wider separation yields slightly better performance. Above 1200 the data format is fixed.

```
EDITING FILE 'NONAME'

RADIO BAUD RATE       1200            RETURN TO EDIT MENU
RADIO DATA BITS       8
RADIO PARITY          NONE            INTERFACE PROTOCOL    NONE
RADIO STOP BITS       1               MESSAGE PACKETING     OFF
                                      FWD ERROR CORRECTION  OFF
FFSK TONE SET         BELL 202        ........
FFSK SYNC/ASYNC       SYNCHRONOUS     ........

SERIAL BAUD RATE      1200            ........
SERIAL DATA BITS      8               ........
SERIAL PARITY         NONE            ........
SERIAL STOP BITS      1               ........
                                      ........
RTS/CTS HANDSHAKE     OFF             ........
DCD OPERATION         CARRIER+DATA
DTR SHUTDOWN          OFF
LEAD IN DELAY (ms)    40              ........
LEAD OUT DELAY (ms)   0               ........


 USE CURSOR KEYS TO MOVE AROUND SCREEN
 SELECT OPTIONS WITH ENTER KEY
```

8.10.7 FFSK SYNC/ASYNC

At speeds between 150 – 1200bps either synchronous or asynchronous can be selected, above 1200 baud the format is fixed as Synchronous. For best performance synchronous mode is suggested.

8.10.8 SERIAL BAUD RATE

The serial port baud rate may be set independently from the radio baud rate in the range 150 to 38400bps. The setting should always be the same speed or higher than the radio baud rate.

8.10.9 SERIAL DATA BITS

Selects either 7 or 8 data bits for the serial port.

8.10.10 SERIAL PARITY

Selects: none, odd or even parity for the serial port.

8.10.11 SERIAL STOP BITS

Selects 1 or 2 stop bits for the serial port.

8.10.12 RTS/CTS HANSHAKE

On or Off can be selected

8.10.13 DCD OPERATION

This option is used in conjunction with the internal modem and is used to select DCD line active on detection of RF Only or RF and Data.

8.10.14 DTR SHUTDOWN

If On is selected, it enables the DTR line to be used for external power save with the on/off ratio being controlled externally via the DTR line. In this mode more of the modem's circuits are shutdown (including the microprocessor), this saves more power but care must be taken to ensure that the modem is enabled when a transmission is to take place. Note that there is a hardware link option to allow the serial port to shut off when DTR is not active, this allows the radio current to be reduced to its bare minimum. In applications where DTR is not connected this link option must of course be disabled.

8.10.15 LEAD IN DELAY

Selects the time the RF carrier is raised before the transmission of data via the internal modem takes place, for more detail see the section of this manual describing transmit/receive timing. The delay is programmable from 0 to 2500ms in 10ms steps.

8.10.16 LEAD OUT DELAY

Selects the time the transmitter remains up after the data has been sent. Used sometimes to give a finite quiet pause after the data has been sent, for more detail see the section of this manual describing transmit/receive timing. The delay is programmable from 0 to 2500ms in 10ms steps.

8.10.17 INTERFACE PROTOCOL

The interface protocol can be used to select NONE, HAYES AT, MODBUS RTU, MODBUS ASCII, DNP3, IEC870 & SK S&F. At the time of writing this version of the manual DNP3 & IEC870 are still under development. For further information on Hayes & MODBUS see the protocol section of the manual.

8.10.18 MESSAGE PACKETING

This option packets packets the message to Eliminate squelch tail noises in systems where they cannot be tolerated

8.10.19 FORWARD ERROR CORRECTION

Forward error correction is a programmable option at 9600bps and will improve the BER
is areas of poor performance, however there is approximately a data through put overhead of 30%.

8.10.20 NETWORK I.D. ADDRESS

The Network I.D can consist of up to 5 digits and differentiates one network or a sub network from another.

8.10.21 RADIO ADDRESS

The Radio Address is the actual address of the radio modem as used in HAYES, MODBUS and for remote programming.

8.11 HAYES "AT" PROTOCOL

If Hayes "AT" selection has been made the following options will appear on the screen, for a more in depth explanation of the programming options see the Hayes "AT" information in the protocol section

```
EDITING FILE 'NONAME'

RADIO BAUD RATE        9600            RETURN TO EDIT MENU
RADIO DATA BITS        8
RADIO PARITY           NONE            INTERFACE PROTOCOL     HAYES AT
RADIO STOP BITS        1               MESSAGE PACKETING      ON
                                       FWD ERROR CORRECTION   OFF
........                               NETWORK I.D.           1234
FFSK SYNC/ASYNC        SYNCHRONOUS     RADIO ADDRESS          1

SERIAL BAUD RATE       9600            AUTO ANSWER TIME (s)   2
SERIAL DATA BITS       8               ESC CHARACTER CODE     43
SERIAL PARITY          NONE            ESC GUARD TIME (ms)    1000
SERIAL STOP BITS       1               MIN PWR SAVE ADDRESS   128
                                       MAX PWR SAVE ADDRESS   255
RTS/CTS HANDSHAKE      OFF             HOST INACTIVITY TIME   10
DCD OPERATION          CARRIER+DATA
DTR SHUTDOWN           OFF
LEAD IN DELAY (ms)     30              ........
LEAD OUT DELAY (ms)    0               ........


 USE CURSOR KEYS TO MOVE AROUND SCREEN
 SELECT OPTIONS WITH ENTER KEY
```

8.11.1 AUTO ANSWER TIME (s)

The auto answer time can be programmed between 0 & 255 Seconds in 1 second steps

8.11.2 ESC CHARACTER CODE

The Escape Character code is a Decimal ASCII code between 0 – 255 which is normally 43 for a "+" sign

8.11.3 ESC GUARD TIME (mS)

The Escape guard time can be programmed between 0 – 5100mS in 20mS steps

8.11.4 MIN & MAX PWR SAVE ADDRESS

To enable power saved radio to be used within a system or mixed system of power save and non power saved radios, the power saved radios must be grouped together by their addresses. The power saved addresses should be contained within the "Min Pwr Save Address" and the "Max Pwr Save Address inclusive.

i.e. Min Pwr Save Address 55
Max Pwr Save Address 105

Any Radio between Addresses 55 & 105 inclusive will operate in power save mode.

8.11.5 HOST INACTIVITY TIME

The Host inactivity time is the time a radio will wait for its host to wake up after raising RI, if auto answer is disabled. The radio can be programmed between 0 –255 seconds in 1 second increments.

8.12 MODBUS PROTOCOL

8.12.1 MODBUS SELECTION

If MODBUS selection has been made the following options will appear on the screen, for a more in depth explanation of the programming options see the MODBUS information in the protocol section

```
EDITING FILE 'NONAME'

RADIO BAUD RATE        9600            RETURN TO EDIT MENU
RADIO DATA BITS        8
RADIO PARITY           NONE            INTERFACE PROTOCOL    MODBUS RTU
RADIO STOP BITS        1               MESSAGE PACKETING     ON
                                       FWD ERROR CORRECTION  OFF
........                               NETWORK I.D.          1234
FFSK SYNC/ASYNC        SYNCHRONOUS     RADIO ADDRESS         1

SERIAL BAUD RATE       9600            ........
SERIAL DATA BITS       8               ........
SERIAL PARITY          NONE            ........
SERIAL STOP BITS       1               MIN PWR SAVE ADDRESS  128
                                       MAX PWR SAVE ADDRESS  255
RTS/CTS HANDSHAKE      OFF             HOST INACTIVITY TIME  10
DCD OPERATION          CARRIER+DATA
DTR SHUTDOWN           OFF
LEAD IN DELAY (ms)     30              ROUTING TABLE         ON
LEAD OUT DELAY (ms)    0               EDIT ROUTING TABLE


 USE CURSOR KEYS TO MOVE AROUND SCREEN
 SELECT OPTIONS WITH ENTER KEY
```

8.12.1.1 INTERFACE PROTOCOL

The interface protocol can either be set for MODBUS RTU or ASCII, with MODBUS selected the MESSAGE PACKETING will always default to ON.

8.12.2. FORWARD ERROR CORRECTION

Forward error correction is a programmable option at 9600bps and will improve the BER is areas of poor performance, however there is approximately a data through put overhead of 30%.

8.12.3 NETWORK I.D.

The Network ID can be any number between 1-65535

8.12.4 RADIO ADDRESS

Address of the radio can be any number between 1-255

8.12.5 MIN & MAX PWR SAVE ADDRESS

To enable power saved radio to be used within a system or mixed system of power save and non power saved radios, the power saved radios must be grouped together by their addresses. The power saved addresses should be contained within the "Min Pwr Save Address" and the "Max Pwr Save Address inclusive.

i.e. Min Pwr Save Address 55
Max Pwr Save Address 105

Any Radio between Addresses 55 & 105 inclusive will operate in power save mode.

8.12.6 ROUTING TABLE

The is an on/off selection to bring up the Edit Routing Table menu

8.12.7 EDIT ROUTING TABLE

Clicking on this field will take the operator into the edit menu for the routing tables, for further information see the MODBUS information in the protocol section.

8.12.8 MODBUS ROUTING TABLE MENU

The Routing Table enables the operator to program a route into the Radio using MODBUS addressing. Further details can be found in the MODBUS Protocol Section 6.9.

```
EDITING FILE 'NONAME'

    PAGE UP                                 EXIT

    MBUS 64                                 MBUS 80
    MBUS 65                                 MBUS 81
    MBUS 66                                 MBUS 82    55
    MBUS 67                                 MBUS 83    55
    MBUS 68    2,3,4,20                     MBUS 84    55
    MBUS 69    2,3,4,20                     MBUS 85    55
    MBUS 70                                 MBUS 86
    MBUS 71                                 MBUS 87
    MBUS 72                                 MBUS 88
    MBUS 73    2,3,14                       MBUS 89
    MBUS 74    2,3,14                       MBUS 90    2,3,4,21
    MBUS 75    2,3,14                       MBUS 91
    MBUS 76                                 MBUS 92
    MBUS 77                                 MBUS 93
    MBUS 78                                 MBUS 94
    MBUS 79                                 MBUS 95

    PAGE DOWN

 USE CURSOR KEYS TO MOVE AROUND SCREEN
 SELECT OPTIONS WITH ENTER KEY
```

The Routing Table consists of several pages of MODBUS addresses and the route by which every MODBUS address is reached must then be entered. For example if the MODBUS device with address 37 is physically connected to the radio with radio address 23, and radio 23 is accessed from the base station via relay radios 4 and 19, then the field entitled “MBUS 37” should be loaded with the route “4,19,23”. If the MODBUS devices with MODBUS addresses 65 and 93 are physically connected to radio 45 and no relays are required then the fields entitled “MBUS 65” and “MBUS 93” should both be loaded with “45”.

If no routing table is loaded or a MODBUS address cannot be found in the routing table the radio assumes that the destination radio address is the same as the MODBUS address and that no relays are required. This can be taken advantage of in simple schemes where no more than one MODBUS device is connected to any one radio.

8.13 RFT ROUTING SELECTION

If RFT Routing selection has been made the following options will appear on the screen, for a more in depth explanation of the programming options see the RFT Routing information in the protocol section

```
EDITING FILE 'NONAME'

RADIO BAUD RATE       9600            RETURN TO EDIT MENU
RADIO DATA BITS       8
RADIO PARITY          NONE            INTERFACE PROTOCOL    RFT ROUTING
RADIO STOP BITS       1               MESSAGE PACKETING     ON
                                      FWD ERROR CORRECTION  OFF
........                              NETWORK I.D.          1234
FFSK SYNC/ASYNC       SYNCHRONOUS     RADIO ADDRESS         1

SERIAL BAUD RATE      19200           ........
SERIAL DATA BITS      8               ADDRESS OFFSET        43
SERIAL PARITY         NONE            ........
SERIAL STOP BITS      1               MIN PWR SAVE ADDRESS  128
                                      MAX PWR SAVE ADDRESS  255
RTS/CTS HANDSHAKE     ON              HOST INACTIVITY TIME  10
DCD OPERATION         CARRIER+DATA
DTR SHUTDOWN          OFF
LEAD IN DELAY (ms)    30              ROUTING TABLE         ON
LEAD OUT DELAY (ms)   0               EDIT ROUTING TABLE


 USE CURSOR KEYS TO MOVE AROUND SCREEN
 SELECT OPTIONS WITH ENTER KEY
```

8.13.1 INTERFACE PROTOCOL

The interface protocol should be set to RFT ROUTING, with RF ROUTING selected the MESSAGE PACKETING will always default to ON.

8.13.2 FORWARD ERROR CORRECTION

Forward error correction is a programmable option at 9600bps and will improve the BER is areas of poor performance, however there is approximately a data through put overhead of 30%.

8.13.3 NETWORK I.D.

The Network ID can be any number between 1-65535

8.13.4 RADIO ADDRESS

Address of the radio can be any number between 1-255

8.13.5 ADDRESS OFFSET

The position of the address in the protocol field is specified using the "ADDRESS OFFSET" parameter. A setting of 0 specifies zero offset, i.e. the address is the first byte in the message, an offset of 6 specifies the 7th message byte and so on. 16 bit addressing or more is not supported as a maximum of only 256 destinations can be supported by the routing table. If the protocol message format does use 16 bit addressing specify the offset for the least significant byte and try to ensure that no two devices use the same l.s.b. in their address.

8.13.6 MIN & MAX PWR SAVE ADDRESS

To enable power saved radio to be used within a system or mixed system of power save and non power saved radios, the power saved radios must be grouped together by their addresses. The power saved addresses should be contained within the "Min Pwr Save Address" and the "Max Pwr Save Address inclusive.

i.e. Min Pwr Save Address 55
Max Pwr Save Address 105

Any Radio between Addresses 55 & 105 inclusive will operate in power save mode.

8.13.7 ROUTING TABLE

The is an on/off selection to bring up the Edit Routing Table menu

8.13.8 EDIT ROUTING TABLE

Clicking on this field will take the operator into the edit menu for the routing tables, for further information see the RF Routing information in the protocol section.

8.13.9 RFT ROUTING TABLE MENU

```
EDITING FILE 'NONAME'

    PAGE UP                                 EXIT

    ADDR 0     12,77,88,99                  ADDR 16
    ADDR 1                                  ADDR 17
    ADDR 2                                  ADDR 18
    ADDR 3                                  ADDR 19
    ADDR 4                                  ADDR 20
    ADDR 5                                  ADDR 21
    ADDR 6                                  ADDR 22
    ADDR 7                                  ADDR 23
    ADDR 8                                  ADDR 24
    ADDR 9                                  ADDR 25
    ADDR 10                                 ADDR 26
    ADDR 11                                 ADDR 27
    ADDR 12                                 ADDR 28
    ADDR 13                                 ADDR 29
    ADDR 14                                 ADDR 30
    ADDR 15                                 ADDR 31

    PAGE DOWN

 USE CURSOR KEYS TO MOVE AROUND SCREEN
 SELECT OPTIONS WITH ENTER KEY
```

The Routing Table enables the operator to program a route into the Radio, further details are in the RFT Routing protocol section.

8.14 CALIBRATE MENU (FACTORY & SERVICE CENTRE OPTION)

Only the Line input level, Line output level, RSSI Test, Input Voltage Test & Temperature Test options within this menu are available to users, the other functions are for factory alignment only and have been inhibited on the normal issue of software.

```
EDITING FILE 'NONAME'


TEST MAX POWER/MOD BALANCE          RETURN TO MAIN MENU

SET TX FREQUENCY

SET RX FREQUENCY                    CAL RSSI/RX TUNING

CALIBRATE POWER                     RSSI/RX TUNING TEST

SET PEAK DEVIATION                  TEMP/PSU TEST

CAL INT MOD/TX TUNING

SET LINE INPUT LEVEL

SET LINE OUTPUT LEVEL



 USE CURSOR KEYS TO MOVE AROUND SCREEN
 SELECT OPTIONS WITH ENTER KEY
```

8.14.1 TEST MAX POWER/MOD BALANCE

This selects the maximum power for TX alignment and modulates the Transmitter with a 50Hz square wave to balance the modulation point.

8.14.2 SET TX FREQUENCY

This adjusts the transmitter's frequency by varying the voltage to the VCTCXO.
It is normally set to the mid point +/-2.5V and the frequency is then set up with the variable capacitor in the VCTCXO. This enables later electronic adjustment to be carried out via a PC or over the radio link.

8.14.3 SET RX FREQUENCY

This adjusts the receiver's frequency by varying the voltage to the VCTCXO.
It is normally set to the mid point +/-2.5V and the frequency is then set up with the variable capacitor in the VCTCXO. This enables later electronic adjustment to be carriedout via a PC or over the radio link.

8.14.4 CALIBRATE POWER

Following the menu, the operator adjusts the power output via the arrow keys and enters requested levels. These levels are used to calibrate the particular RF power profile of the individual product. This profile is then used to accurately select the required RF power level via the PC program or over the radio link.

8.14.5 SET PEAK DEVIATION

Using the up/down arrow keys the peak deviation level is set for the required channel spacing.

8.14.6 INTERNAL MOD LEVEL

The internal modulation level adjustment sets the normal modulation level for the product.

8.14.7 SET LINE INPUT LEVEL & SET LINE OUTPUT LEVEL

These options allow the line input and output levels to be adjusted between –20 and +3dBm.

8.14.8 CAL RSSI

With a single generator connected to the radio modem, the operator adjusts the output level as requested by the program and each level is entered into the products memory.
These levels are used to build up a calibration profile of the RSSI response of individual products. The profile is then used to accurately measure the RSSI level of any received signal and display the value in dBuV on a PC.

8.14.9 RSSI TEST

Will read the incoming signal level (RSSI) and will display the value within the range of
-15 to +30dBuV for antenna alignment and range testing

8.14.10 TEMP/PSU TEST

This function measures the internal temperature of the radio and the input voltage level of the connected power supply.

8.14.11 RETURN TO MAIN MENU

Simply returns the user to the Main Menu

8.15 NETWORK MANAGEMENT

The Network Management option if installed enables the operator to manage all the radios within the network from a single point via a PC

```
EDITING FILE 'NONAME'

   DESTINATION RADIO    20            PROGRAM REMOTE RADIO
   1ST RELAY RADIO      2
   2ND RELAY RADIO      3             READ REMOTE RADIO
   3RD RELAY RADIO      4
   4TH RELAY RADIO      -             EDIT PROGRAM
   5TH RELAY RADIO      -
   6TH RELAY RADIO      -             ROUTE DIAGNOSTICS

                                      TUNE ALL RADIOS

                                      REMOTE FIRMWARE DOWNLOAD

                                      RETURN TO MAIN MENU

 USE CURSOR KEYS TO MOVE AROUND SCREEN
 SELECT OPTIONS WITH ENTER KEY
```

8.15.1 DESTINATION RADIO

The destination radio is the address of the radio that the user wants to communicate with.

8.15.2 1st – 6th RELAYS

The relays are the radios in between base station or radio that the PC is connected to & the destination radio, in other words the route to get to the destination radio.

8.15.3 PROGRAM RADIO

This command will remotely program the destination radio over the radio link with the new edited program

8.15.4 READ REMOTE RADIO

This command will remotely read the program within the destination radio over the radio link

8.15.5 EDIT PROGRAM

This command brings up the full editing program to enable changes to be made

8.15.6 ROUTE DIAGNOSTICS

The route diagnostics menu will display the RF power settings, received signal strength, any frequency offset from the base station, the internal temperature, Input Voltage and I.O. conditions at each of the units in the link between the base station and the destination radio.

It also enables the operator to adjust the RF power of destination and base station radio, to re-establish the correct signal strengths in the link and toggle the digital outputs.

8.15.7 TUNE ALL RADIOS

The tune all radios command will trim the frequency of the receiver and transmitter modules contained in each ART throughout the link to match that of the base station. This is fully automated and requires no input from the operator.

8.15.8 REMOTE FIRMWARE DOWNLOAD

The remote firmware download is used to download new firmware securely over the radio link to a specific radio, number of radios or the complete network of radios.

8.15.9 RETURN TO MAIN EDIT MENU

Returns the user to the main menu.

8.16 ROUTE DIAGNOSTICS MENU

```
RADIO  SOURCE  RSSI(dBuV)  MEAN RSSI  RX O/S %  MEAN O/S %

2      1       20          18         3         3
3      2       18          19         3         3         TRANSMISSIONS  5
2      3       20          18         4         5         FAILURES  0
1      2       19          18         5         4



RADIO    TX PWR(W)    RXTUN %      TXTUN %      PSU V      t(C)     i0 i1 o0 o1

1        5.00         0            0            12.0       21       0 0   0 0
2        5.00         0            0            12.0       21       0 0   0 0
3        5.00         0            0            12.0       21       0 0   0 0


COMMANDS: select (L)ocal radio or (R)emote radio, tx power (U)p or (D)own,
toggle digital output (0) or (1), (Q)uit.
```

The Top of the Screen displays the "Radio's address " and the address of the "Source" of the signal with the respective instantaneous RSSI level (RSSI dBuV) and the Mean RSSI level after a few samples have been taken.
The instantaneous receiver frequency off set (RX O/S%) and the Mean receiver offset
(Mean O/S%) after a few samples have been taken is also displayed.
The percentage offset refers to the radios deviation of +/-2.5KHz with
100% = 2.5 KHz, 50% = 1.25 KHz and 20% = 500Hz
The Lower part of the screen shows the individual radio's address in the link
together with its RF power setting and the stored RX & TX tuning offsets.
The other parameters are the Input power supply voltage at each radio, the internal temperature of each radio and the I.O. Status.
By using the commands on the bottom of the screen the operator can adjust the RF power & toggle the I.O. of the base station and destination radio.

9

INSTALLATION

9.0 INSTALLATION

9.1 INTRODUCTION

The ART Series are DIN rail mountable Radio Modems for portable, mobile and fixed applications, suitable for applications with transmit duty cycles of less than 70%.
For higher TX duty cycles an upgraded heat sink can be used, which increases the length of the ART.

Correct installation should ensure reliable data communications for many years. The most important installation points to remember are:

Suitable antenna system mounted at the correct height & polarisation to achieve the required distance.

Reliable power supply capable of supplying the correct voltage and current.

Correct installation for the environment

Correct interface and set-up

Assuming the unit has been correctly installed and tested at the correct data speed, the only other factors that will effect the performance, are the RF power, (Normally Specified by the regulating authority), the local topography and the weather, none of which the user can control.

9.2 POWER SUPPLIES

The ART series can be powered from any power source providing the voltage is between 9.6VDC & 15VDC –VE GND. If a +VE GND system is in use, an isolated converter will be required.
The ART Series is available in either 10mW – 1Watt or 20mW – 5Watts, which requires a supply current of 1Amp and 2.5Amps respectively.

Under no circumstances should the Power supply rise above 16VDC.

For 240/110VAC, 50VDC or 24VDC, R.F. Technologies produce a range of uninterruptable power supply units with an in-built charger and power fail indication. A range of suitable Gel type batteries is available should a back-up supply be required during power fail.

ART DIN Power Supplies:

ART750	80- 250VAC to 12VDC 3 Amps with backup battery charger & fault reporting via the I2C Bus
ART751	18 – 60VDC isolated to 12VDC 3 Amps with backup battery charging and fault reporting via the I2C bus

9.3 EFFECTIVE RADIATED POWER (ERP)

The Radio Frequency (R.F.) Power allowed can be specified in two ways:

The "Terminated power into 50 ohms", which in the case of the ART 5watt product would be a maximum of 5Watts.

The "ERP" is the actual radiated power, taking into account the gain/loss of the antenna and loss in the feeder. Hence, if we use an aerial with a Gain of 3dB (x2) and assume no loss in the cable, the ERP with an input of 5watts would be 10Watts.

The gain of an antenna is very useful as it enables lower power transmitters to be used in many cases in place of high power transmitters, with the advantage of a much lower current consumption.

For example if the ERP allowed for a link is 5Watts, then an ART 5Watt product operating into a unity gain antenna, would require a supply current of 2Amps to provide an ERP of 5Watts.

If however, we use an 8 element directional Yagi with a Gain of 10dB, we would only need 500mW for the same performance.
With a 5Watt ART product operating at 500mW, we would only require 600mA. Alternatively with a 1Watt ART Product operating at 500mW the current would drop to 350mA. If the site is battery or solar powered then the saving is very significant.

Care must be taken when setting the power within a MPT1329/1411 system, as RF power is specified as maximum ERP.

9.4 CIRCULATORS

For common base station sites (sites with multiple of transmitters and receivers) there may be a requirement to minimise the possibility of Transmitter Intermodulation.
Transmitter Intermodulation is caused by very high level signals mixing with the transmitted signal in the final power amplifier, as the final amplifier is normally non linear mixing products will occur that could cause interference to other users on the site.
The Intermodulation rejection level of the ART is about 15dB. For ETS300-113 common base standards 40 or 70db is a requirement. This level of Intermodulation can easily be achieved with the use of external circulators, these are available from the sales office.

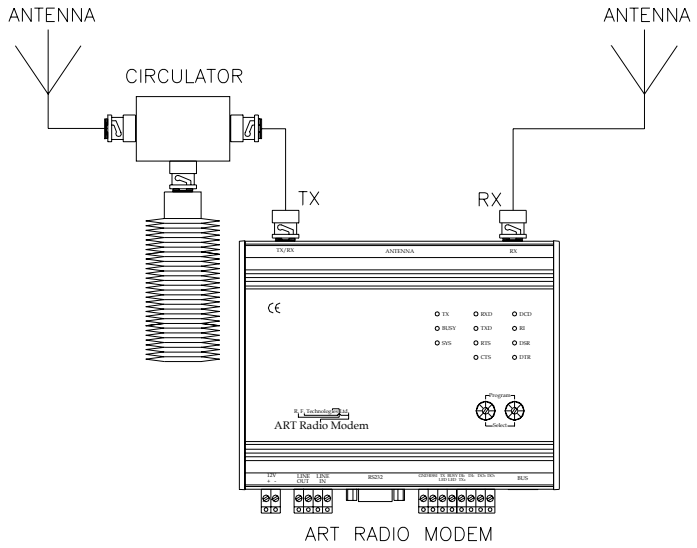

NOTE: A circulator is a directional device and if put in the receivers path would block any incoming signals. Hence, it can only be used in the transmitter path and so the ART has to be configured for two antenna operation. or a TX/RX switch can be used after the circulator.

9.5 RF POWER AMPLIFIERS

In licensed applications where an RF power greater than 5Watts is required, an add-on RF power amplifier can be used. Two versions are available 1 – 10Watts or 1 – 25Watts, these are PC programmable in the same way as the ART.

9.6 ANTENNAS, COAX FEEDERS & PERIPHERALS

9.6.1 ANTENNAS

Apart from the radio modem, the antenna is probably the most important part of the system.
The wrong choice or a bad installation will almost certainly impede the product's performance. Depending on the application either an omni-directional or directional antenna will be required.

9.6.2 TYPES OF ANTENNAS

We can offer a complete range of antennas to suit all applications, details of some of the more popular ones are outlined below:

Antenna Types	*Typical Gain*	*Polarisation*	*Use*
Vertical Whip	0dB	Vertical	Local use.
Helical	-3dB	Vertical	In-house testing
End Fed Dipole	0dB	Vertical	Local Scanner or Multi-Folded Dipole
	0dB	Vertical/Horizontal	point system
6dB Co-linear	+6dB	Vertical	
3dB Co-linear	+3dB	Vertical	Wide area Scanner
12 Element Yagi	+12dB	Vertical/Horizontal	Outstation or point to point 4 Element Yagi
	+8dB	Vertical/Horizontal	link
Corner Reflector	+10dB	Vertical/Horizontal	Outstations in areas of bad Interference or where unwanted radiation must be kept to minimum.
Patch Antenna	0dB	Vertical/Horizontal	Kiosk or wall mounting

9.6.3 DIRECTIONAL ANTENNAS

For point to point communications, a directional Yagi or corner reflector is probably the best type of antenna to use. As directional antennas provide relatively high gain in the forward direction within a limited beamwidth and very good rejection of unwanted signals at the rear. The number of elements and hence the size, will depend on the gain and beam width required. Yagi antennas can be used in the vertical (vertically polarised) or horizontal (Horizontally polarised) but communicating products should be fitted with antennas of the same orientation, if not a loss of signal strength will occur. Vertical and horizontal propagation can be very useful on single or repeater sites where isolation is required between communication paths. Using differently polarised antennas for each path will increase the isolation which will reduce possible interference.

9.6.4 OMNI-DIRECTIONAL ANTENNAS

With approximately 360 degree radiation pattern, this type of antenna is ideal for a scanning station or where communication to a group of widely dispersed outstations is required.

9.6.5 PATCH OR PLATE ANTENNAS

The patch or plate antennas are normally rectangular or round, with a back plate of aluminium or stainless steel. A polycarbonate or ABS cover is fitted to protect the antenna from the environment. This type of antenna can be produced in different sizes with various radiation patterns to suit the application. Depending on the construction and radiation pattern, the gain is usually between -3dB to +

3dB. Their use is very popular on road side kiosks, buses, trains, aircraft, or where covert communication is required.

9.6.6 ANTENNA MOUNTING

Location:
The antenna should be mounted in a clear area, as far away as possible from obstructions such as metal constructions, buildings and foliage.

Height:
The ART products operate in the VHF/UHF & 900MHz, which require normal line of sight communication. Hence, for extended ranges the height of the antenna is important.

9.6.7 POLARISATION

A Yagi or corner reflector antenna can be mounted for vertical or horizontal polarisation. Scanning systems employing a vertically polarised antenna, will necessitate the outstation antennas to be of the same orientation. In vertical polarisation the elements are perpendicular to the ground. By mixing polarisation within systems, unwanted signals can be reduced by as much as 18dB. However, such systems require detailed planning.

9.6.8 ALIGNMENT

If a directional antenna is to be used, it will need alignment with the scanner or communicating station. A map and compass can be used, but the final adjustment should be performed by measuring the receive signal strength (RSSI) from the scanner, as outlined in the operations section.

9.6.9 ANTENNA COAX FEEDER:

As with the antenna, the use of the wrong coax feeder can seriously affect the performance of the system. Hence, the coax cable should be selected to give a low loss over the distance required. For outstations in the local vicinity of the scanner/ base station, the loss is not very important but for distant stations the loss is very important. As a rule of thumb, never operate a system with a loss of more than 3dB.

To illustrate the point, a 3dB loss in the feeder will result in a 50% loss in transmitted RF power and a 50% reduction in the received signal strength. Therefore, double the received signal strength will be required for the same bit error rate.
Although increasing the RF power will compensate for the loss in transmitted power, there is no effective way to improve the received signal strength.

Coax cable should be installed in accordance with the manufacturers' instructions, with cable runs kept as short as possible. Sharp bends, kinks and cable strain must be avoided at all costs. If long term reliability is required, the cable must be securely mounted to avoid excessive movement and longitudinal strain, due to high winds, rain and snow.

9.6.10 SAFE DISTANCES

In order to comply with the USA MPE RF exposure requirements the antenna should be mounted is such a position that the safe distances outlined below should be maintained.
The safe limits below, relate to the general population with uncontrolled exposure in the frequency band 300-1500MHz for an average time of 6 minutes.
The calculations were based on the highest frequency of 512MHz with a power output of 5Watts.

Type of Antenna	Gain	Safe Distance
End Fed Dipole	0dB	0.4mtr
Folded Dipole	0dB	0.4mtr
3dB Co-linear	+3dB	0.7mtr
6dB Co-linear	+6dB	0.9mtr
4 Element Yagi	+8dB	1.0mtr
Corner Reflector	+10dB	1.1mtr
12 Element Yagi	+12dB	1.2mtr

9.6.11 SIGNAL LOSS VERSES CABLE LENGTH AT 500MHZ

Cable Type	*Attenuation per 100ft*	*Attenuation per 100M*
RG58	13.0dB	37.0dB
RG213	6.0dB	17.5dB
LDF2-50 3/8inch Foam Heliax	2.44dB	8.0dB
LDF4-50 1/2inch Foam Heliax	1.60dB	5.26dB
LDF5-50 7/8inch Foam Heliax	0.883dB	2.9dB
LDF6-50 1-1/4inch Foam Heliax	0.654dB	2.15dB
LDF7-50 1-5/8inch Foam Heliax	0.547dB	1.79dB

9.6.12 COAX, CONNECTORS:

50 Ohm coax connectors of a good quality should be used, termination must be in accordance with the manufacturer's specification, any special tools required to terminate the connectors must be used. Connectors exposed to the environment should be sealed to prevent the ingress of moisture. If the cable is penetrated by water a high loss will occur and the cable will need to be replaced. Once assembled it is advisable to test the cable and connectors for open and short circuits.

9.6.13 VSWR MEASUREMENT:

Voltage standing wave ratio (VSWR) is the ratio of detected volts from the forward RF power, to the detected volts from the reflected (returned) RF power. This ratio is used to measure the combined coax cable and antenna match. A good match will ensure that most of the RF Power is radiated, whereas a bad match will result in the reflection of a large amount of the power, thereby reducing the transmitter's range. A perfect match will give a 1:1 ratio and bad match will give 2:1 or higher. For guidance, a good system will measure between 1.2:1 and 1.5:1.

9.6.14 LIGHTNING ARRESTERS

At high or exposed sites, the use of a lightning arrester is recommended.
This in-line device fits between the antenna and the product with an earth strap connected to ground. Should a lightning strike occur, the most of the energy should be diverted to ground leaving the equipment with little or no damage.

9.7 MOUNTING & INSTALLATION

The ART Series are built into tough durable milled aluminium enclosures that can be mounted in any plane, but should not be exposed to rain etc. as the enclosure and connectors do not meet the relevant IP ratings.

If IP65, 67 or 68 is required then an additional enclosure will be required, details of suitable enclosures are covered in the following pages.

9.7.1 ART DIMENSIONS

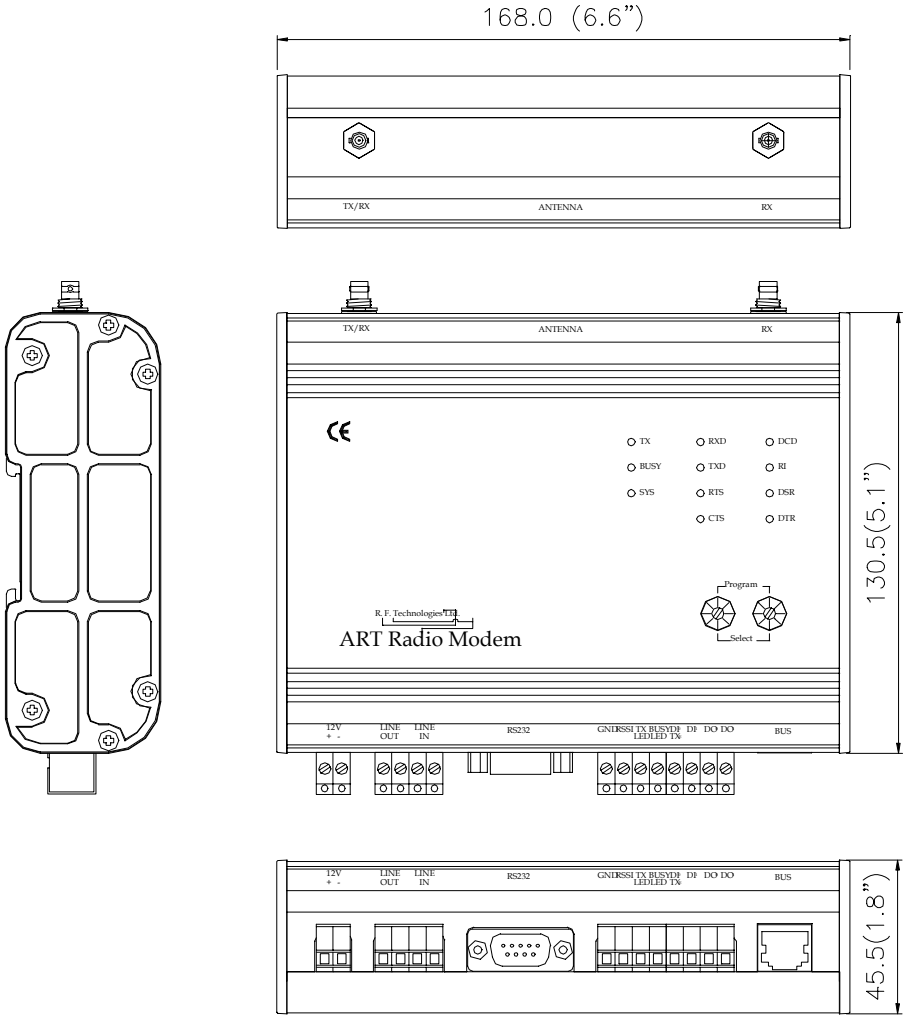

9.7.2 ART MOUNTING

The ART Series can be DIN rail mounted or panel mounted with the optional mounting bracket.

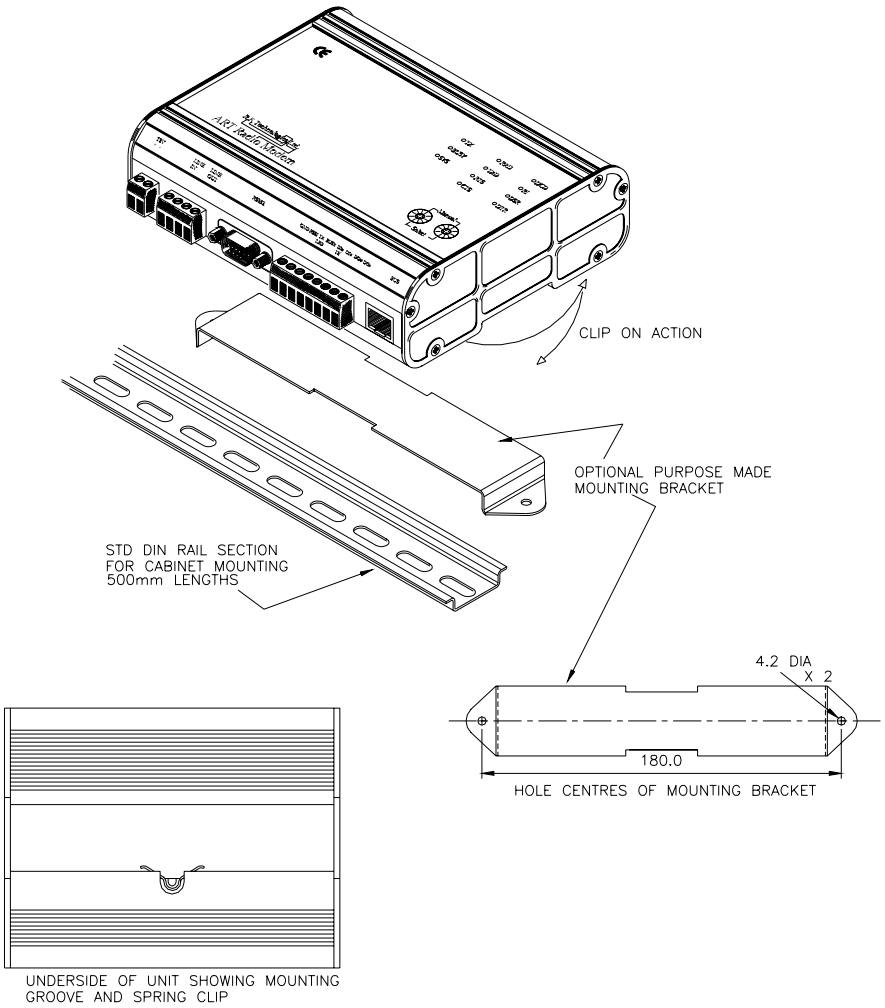

9.7.3 ANTENNA CONNECTION THROUGH AN ENCLOSURE:

When an ART is used within an enclosure, the coax antenna cable can either be brought out via a suitable gland or via the "N" type adapter kit shown above.
For IP68 installations, please consult the office for different enclosures.

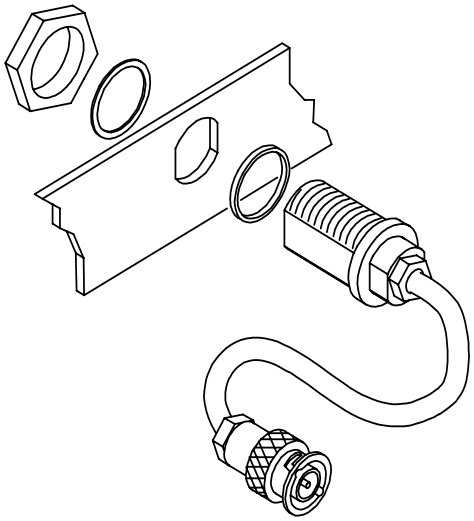

9.7.4 WALL MOUNTING ENCLOSURE

The wall mounting enclosure has space for an ART400, power supply and re-chargeable battery.

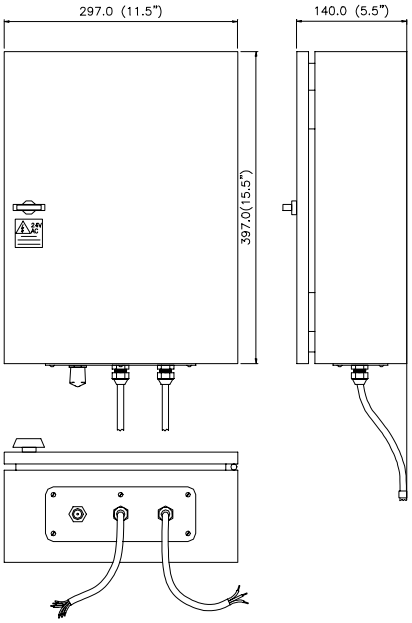

10

I.O. MODULES
&
PROTOCOLS

10.0 I.O. MODULES & PROTOCOLS

10.1 I.O. MODES OF OPERATION

10.2 ISOLATED NETWORK WITH POINT TO POINT I/O MAPPING

Inputs and outputs at outstations are mapped to corresponding outputs and inputs at the master.

10.3 NETWORK WITH RETRIEVED DATA ACCESS AT BASE STATION.

Instead of mapping data to physical inputs and outputs at the master, data is exchanged in memory. The memory is accessible using MODBUS. The base station carries out its data retrieval process independently of the MODBUS accesses.

10.4 EXTERNALLY CONTROLLED NETWORK

In this mode the base station only carries out data retrieval when requested to do so by the MODBUS interface.

The above modes are not independent processes but are run according to set up, it is possible to configure operation to be a mix of all three. E.g. some physical I/O might be desirable at the base station whilst the rest is passed by MODBUS, the base station can be set to keep polling independently in order to maintain the physical I/O but can also mix in commands passed by MODBUS.

10.5 DIN I.O. MODULES

ART710	8 Digital programmable Input or Output
ART720	4 12bit Analogue Outputs Current
ART721	4 12bit Analogue Outputs Voltage
ART730	4 12bit Analogue Inputs Current or Voltage
ART740	4 Digital I.O. 2 12bit Analogue Inputs, 2 12bit Analogue Outputs
ART780	I2C Protocol converter to MODBUS, CANBUS, DEVICENET etc.
ART781	2 x RS232/485 to I2C Bus converter
ART782	GPS module
ART790	Duplicated controller

Notes

Notes

Notes

Notes

Notes

R.F Technologies Ltd

27 – 29 New Road
Hextable
Kent BR8 7LS

Tel: +44 (0) 1322 614 313
Fax: +44 (0) 1322 614 289

E-Mail: sales@rftec.co.uk

ADDITIONAL PRODUCT DATA
http://www.rftec.co.uk