MBX8 Setup Sheet

Ver. 1801E – Arn0 – Petitrc.com

MUGEN SEIKI

Name: Ryan Maifield
Date:
Track: Proline/ Thunder Alley

Track Condition

Size:	☑ Open	☐ Med.	☐ Tight
Traction:	☐ High	☑ Med.	☑ Low
Surface:	☐ Smooth	☐ Med.	☑ Bumpy

Result

Race time / Lap:
Best lap (1Lap):

Front Suspension

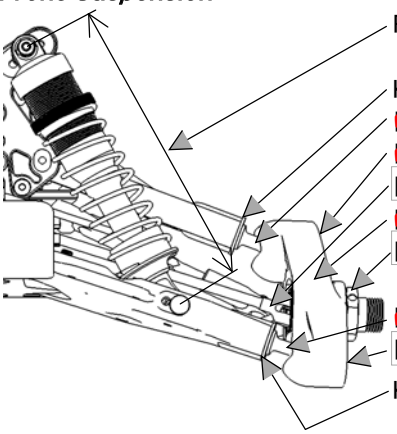

Rebound stop: 104.5mm

Kingpin ball spacer: std.

☑ E0160 ☐ E2123(Steel)
☑ E0159 ☐ E2124(Steel)
☐ E2218 ☑ E0220(CVD)
☑ E2146 ☐ E2147(1.5)
☐ E0239 ☑ E0240(1mm)
☐ E0241(2mm)

☑ E0160 ☐ E2123(Steel)
☐ E0159 ☐ E2124(Steel)

Kingpin ball spacer: std.

Ride height: 26mm
Toe angle: 2 out
Lower arm plate:
☐ E2144A,B
☐ E2154(CFRP 1mm)
☑ E2155(CFRP 1.2mm)
Anti roll bar: 2.2
Upper arm spacer: middle

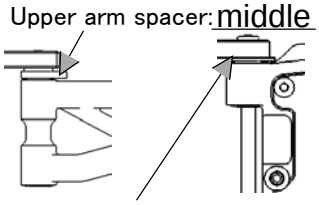

Lower arm spacer:

Upper arm position:

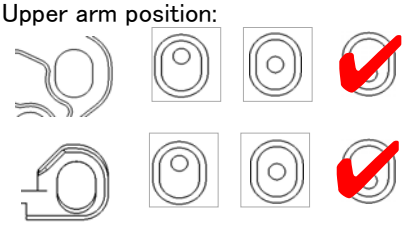

Lower arm position (Kick up):

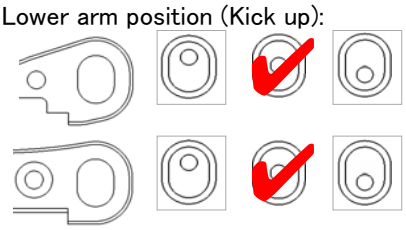

Front Shocks

Piston: E2525 Oil: FP 600
Spring: 9.0
Shock position:

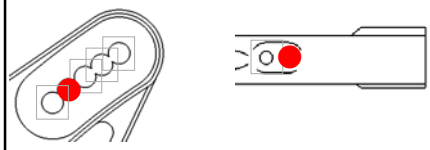

Pivot ball position: ☑ Front ☐ Rear
Damper stay: ☐ E2562(Aluminum) ☑ E2565(CFRP)

Ackermann

Front

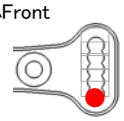

Front Upper Plate

☑ E2148D ☐ E2158(CFRP)

Servo Saver Arm

☐ E2301A ☑ E2310(Aluminum)

Rear Suspension

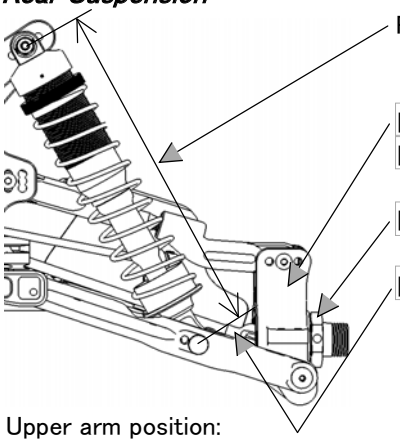

Rebound stop: 118.5MM

☐ E2131
☐ E2134(Aluminum)

☐ E0239 ☑ E0240(1mm)
☐ E0241(2mm)
☐ E2219 ☑ E0220(CVD)

Ride height: 26
Camber angle: 21mm
Lower arm plate:
☐ E2145A,B
☐ E2156(CFRP 1mm)
☑ E2157(CFRP 1.2mm)
Anti roll bar: 2.6
Lower arm spacer:

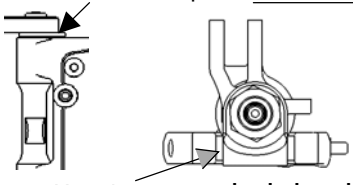

Upright spacer: hub back

Upper arm position:

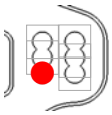

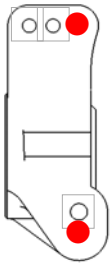

Lower arm position (Anti-squat)

Lower arm position (Toe angle):

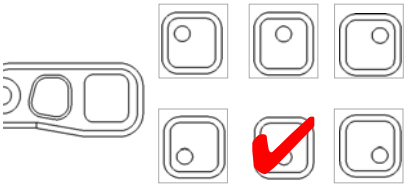

Rear Shocks

Piston: E2525 Oil: FP 500
Spring: 10.5
Shock position:

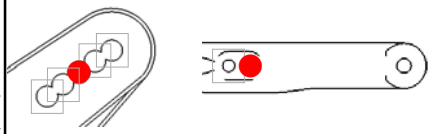

Pivot ball position: ☑ Front ☐ Rear
Damper stay: ☐ E2563(Aluminum) ☑ E2566(CFRP)

Center Shaft

☐ E0223,E0259 ☐ E2228,E2229

Tension Rod

Front: ☐ E2107A(Long) ☑ E2107B(Short)
Rear: ☑ E2148C ☐ E0803(Rubber)

Ballast

g 20 g

Engine

Type: Plug: Reducer:
Muffler: Fuel: Gasket:
Engine mount: ☐ E0701(Standard) ☐ Other

Differential

			Oil
Front:	☑ 44/13T	☐ 42/12T	fp6000
Rear:	☑ 44/13T	☐ 42/12T	fp4000
Center:	☐ 44T ☑ 46T		fp10000
	☐ 47T	☐ 48T	

Tyres

	Front	Rear
Type:	ic reflex	ic reflex
Compound:	green	green
Inserts:	std	std
Wheel:	ic	ic

Clutch

☐ 3P ☐ 4P
Clutch bell: ☐ 13T ☐ 14T
Clutch shoes ☐ C0754 ☐ E0704 ☐ E0710 ☐ E2706
Clutch spring ☐ 0.8 ☐ 0.9 ☐ 0.95 ☐ 1.0 ☐ 1.05 ☐ 1.1

Body & Wing

Body: mbx8
Wing: ae
Wing position:

Front

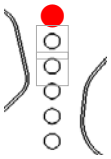

Comments

Wing all the way up on carbon tower. E2168 steering plates.
Center dog bones.